TURTLETOP

Terra Transit

LD – 14 Passenger with Luggage/Cargo

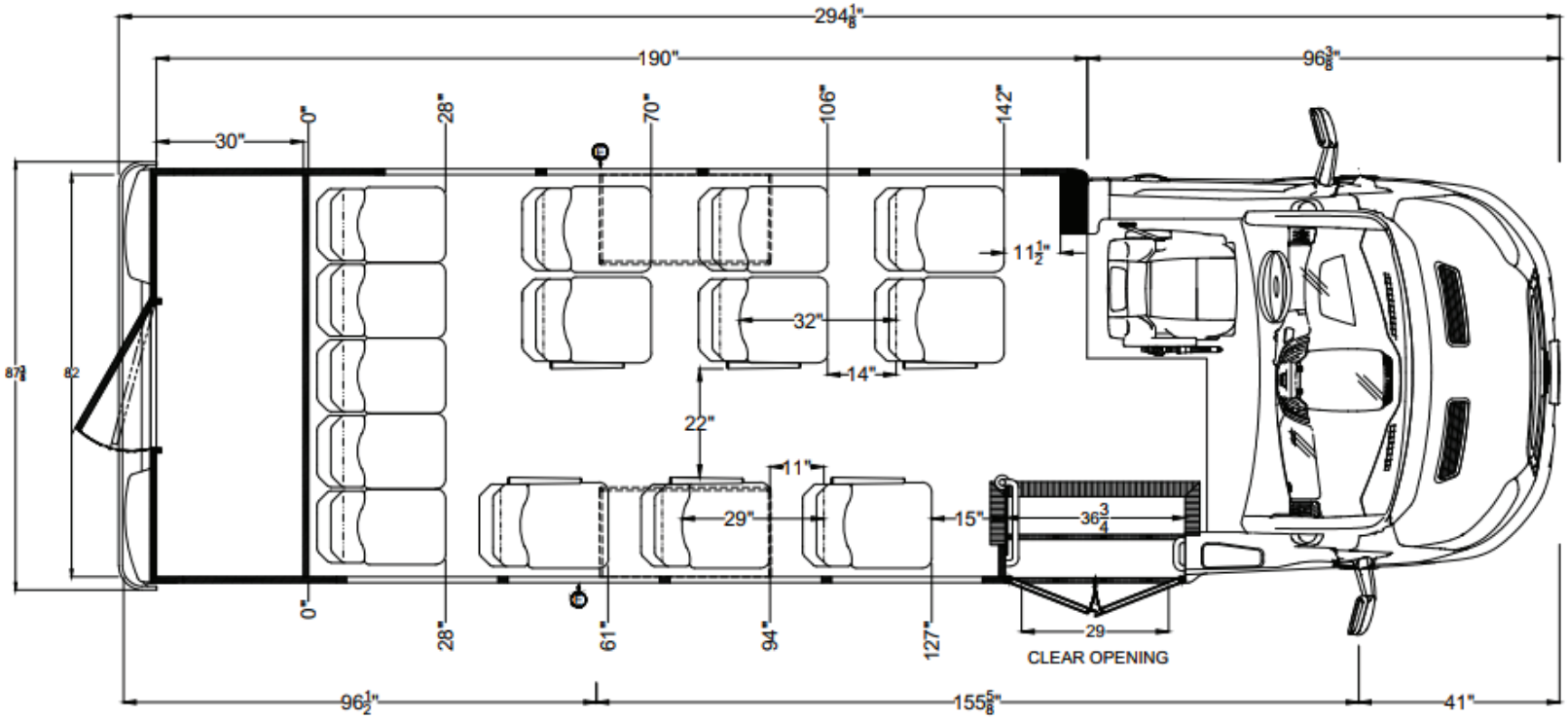

ABC COMPANIES

TURTLETOP

Terra Transit

LD – 14 Passenger with Wheelchair Access

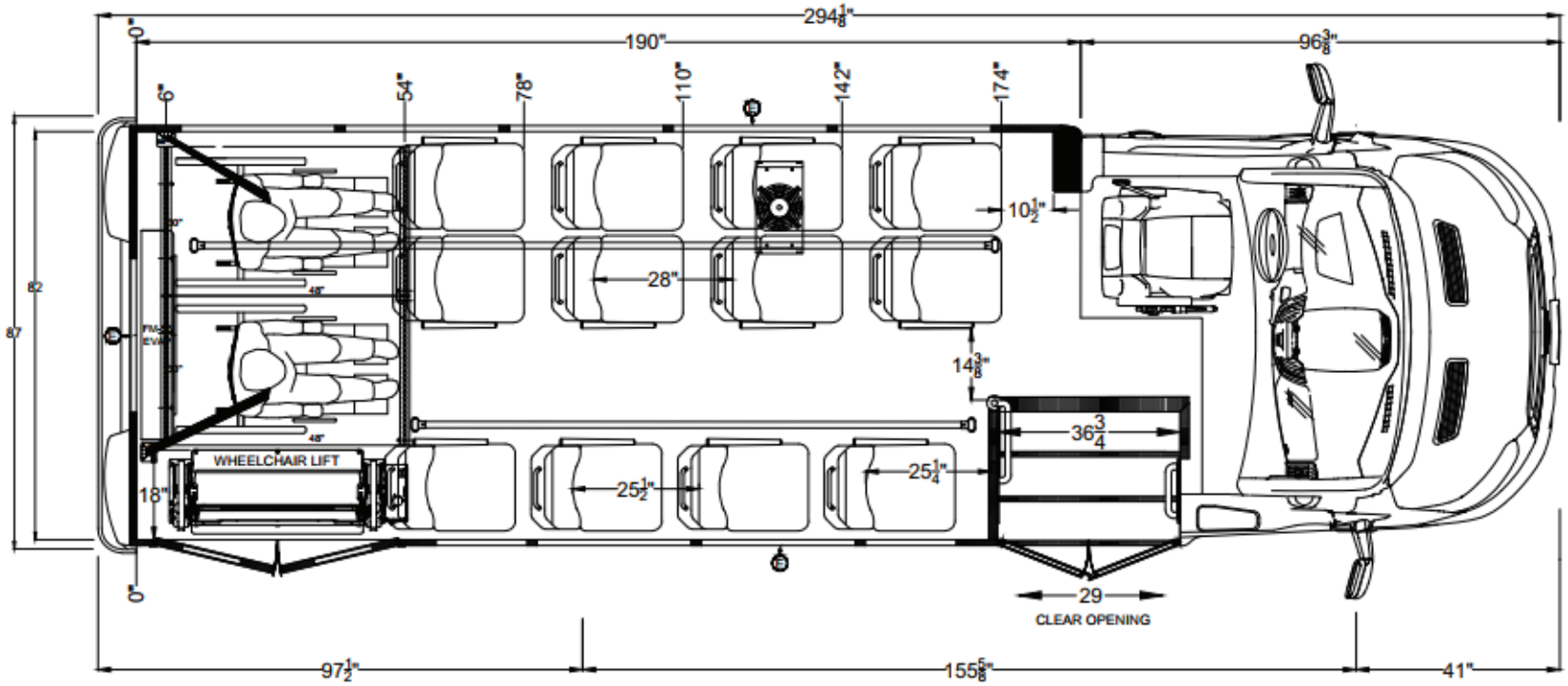

ABC COMPANIES

TURTLETOP

Terra Transit

LD – 13 Passenger with Wheelchair Access

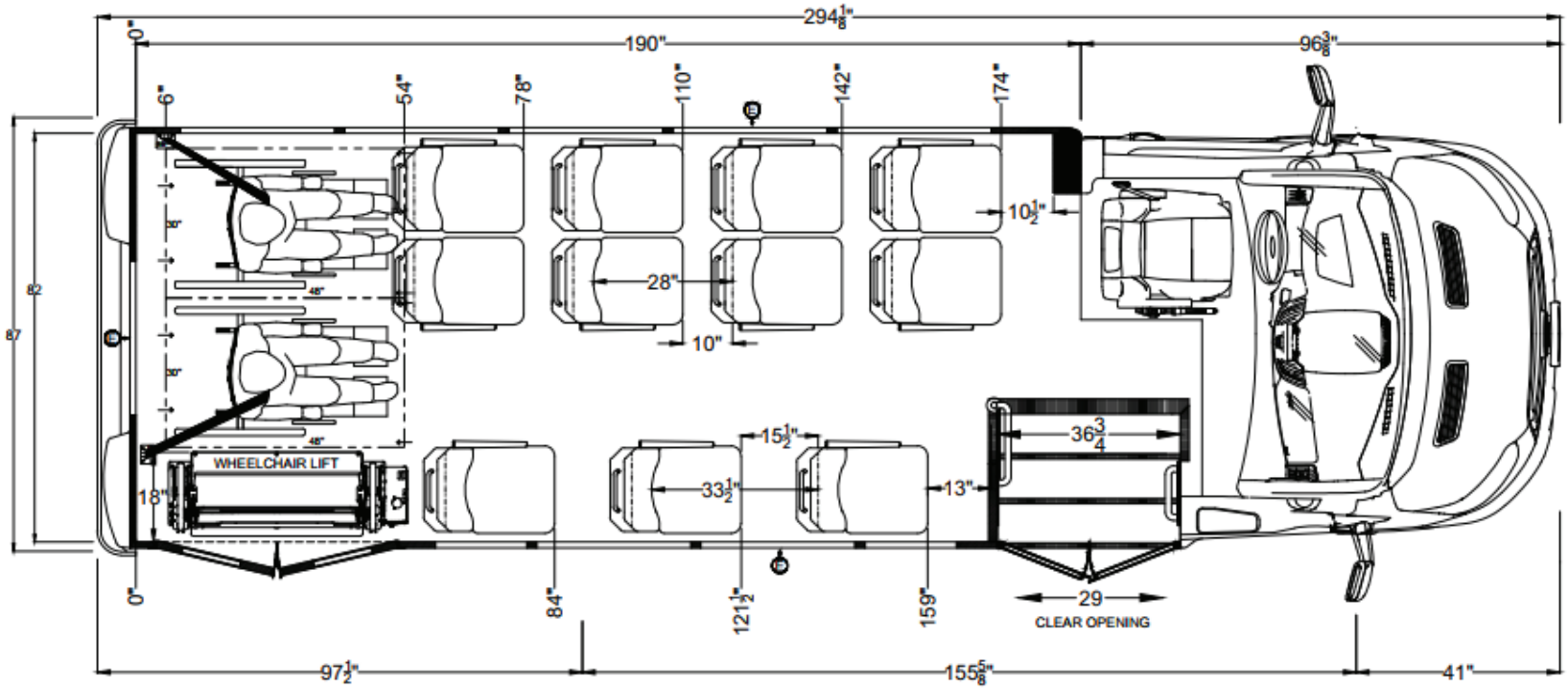

ABC COMPANIES

TURTLETOP

Terra Transit

LD – 11 Passenger with Wheelchair Access

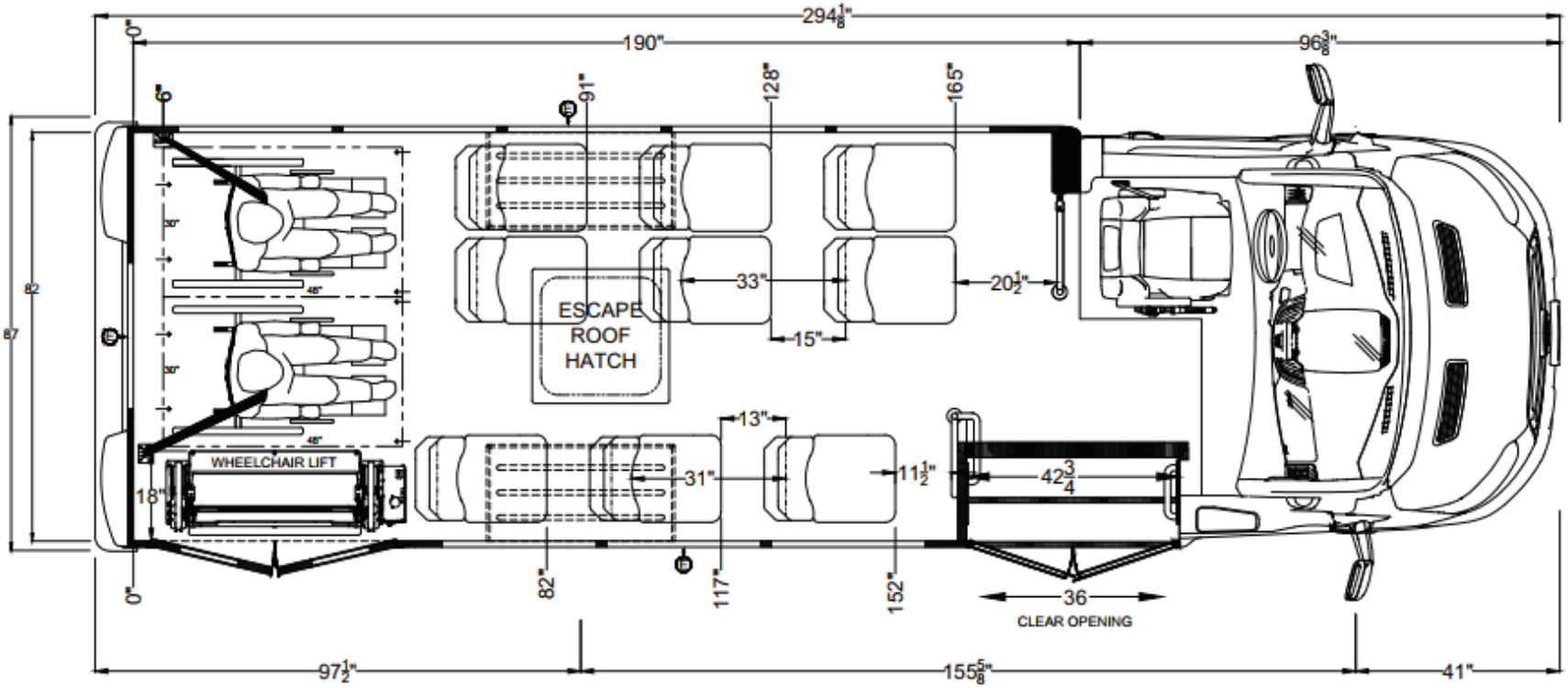

ABC COMPANIES

TURTLETOP

Terra Transit

LD – 10 Passenger with Wheelchair Access

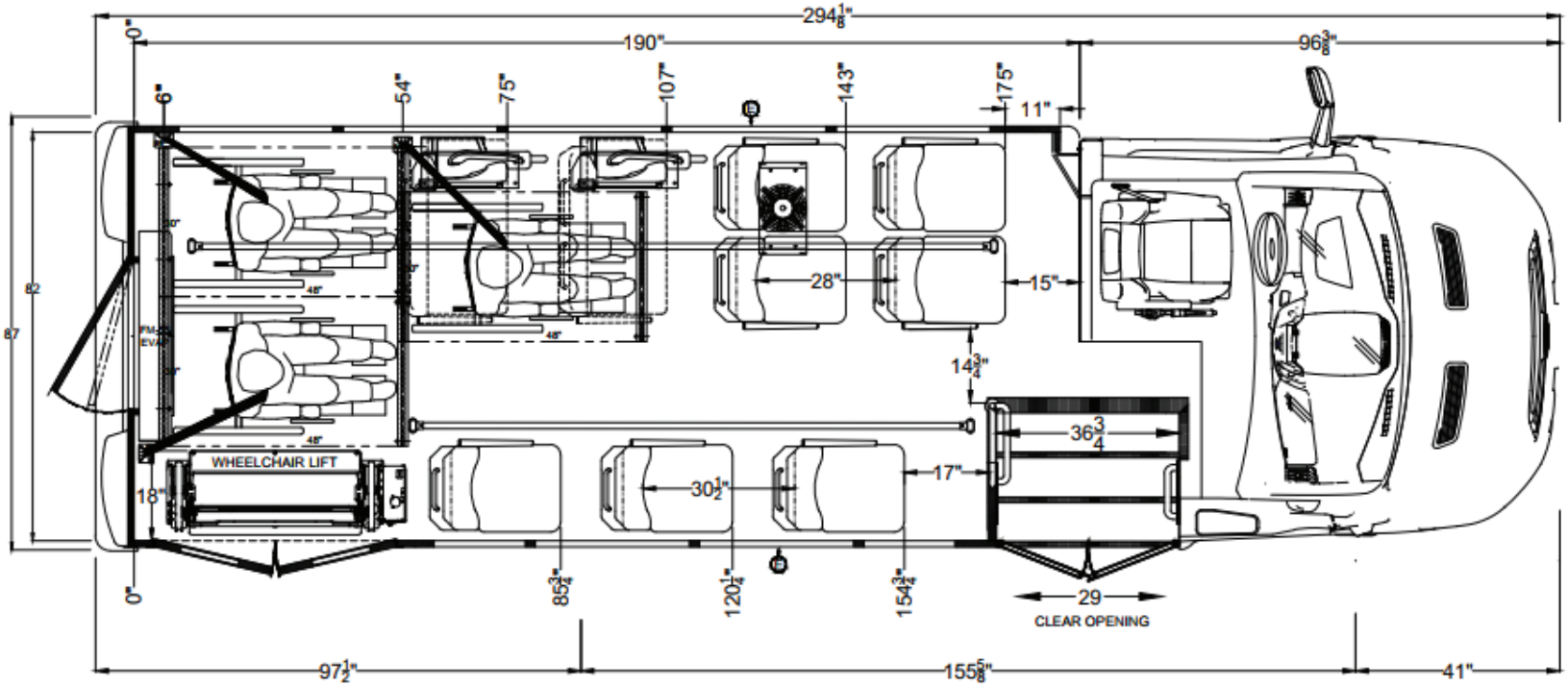

ABC COMPANIES

TURTLETOP

Terra Transit

LD – 6 Passenger with Wheelchair Access

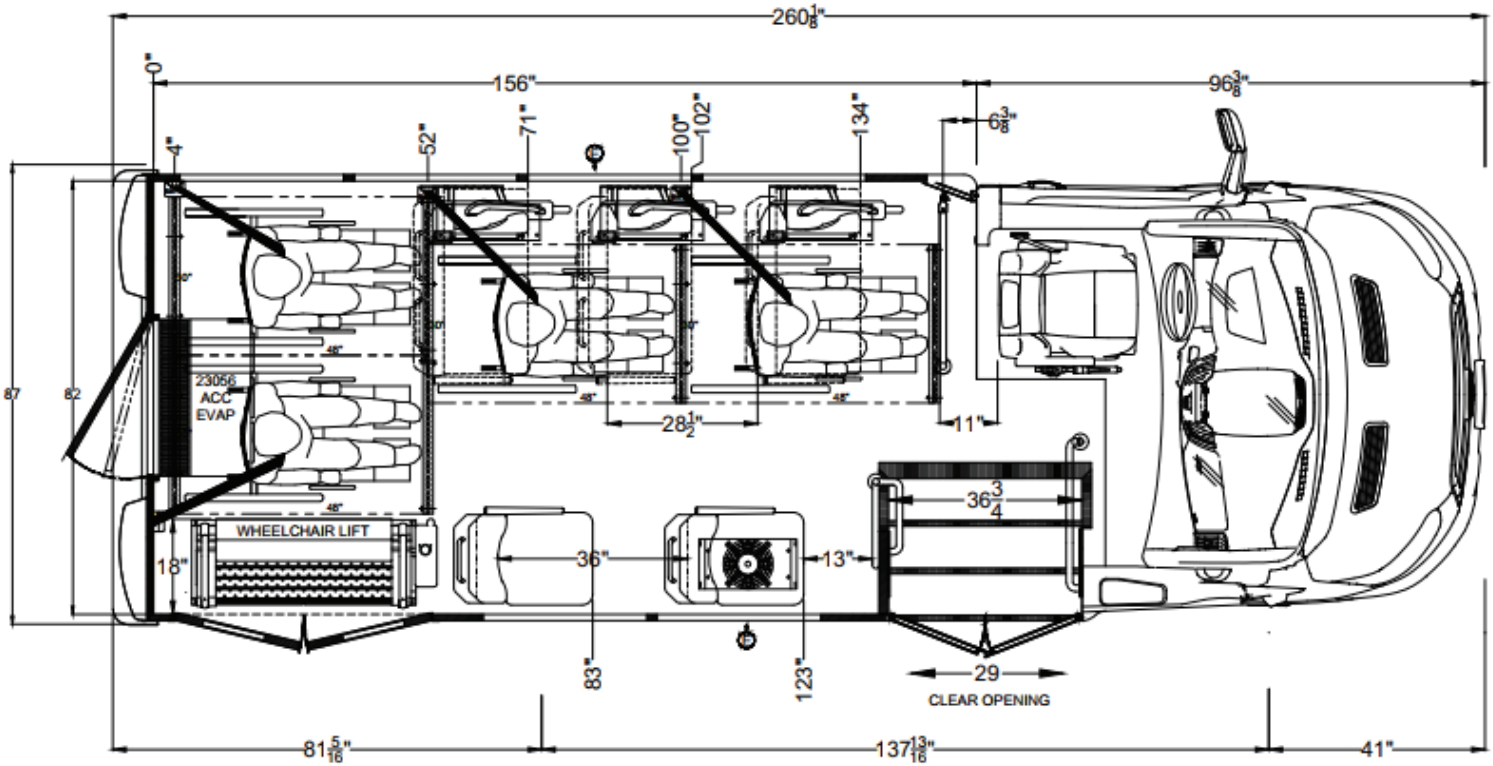

ABC COMPANIES

TURTLETOP

Terra Transit

LD – 9 Passenger with Wheelchair Access

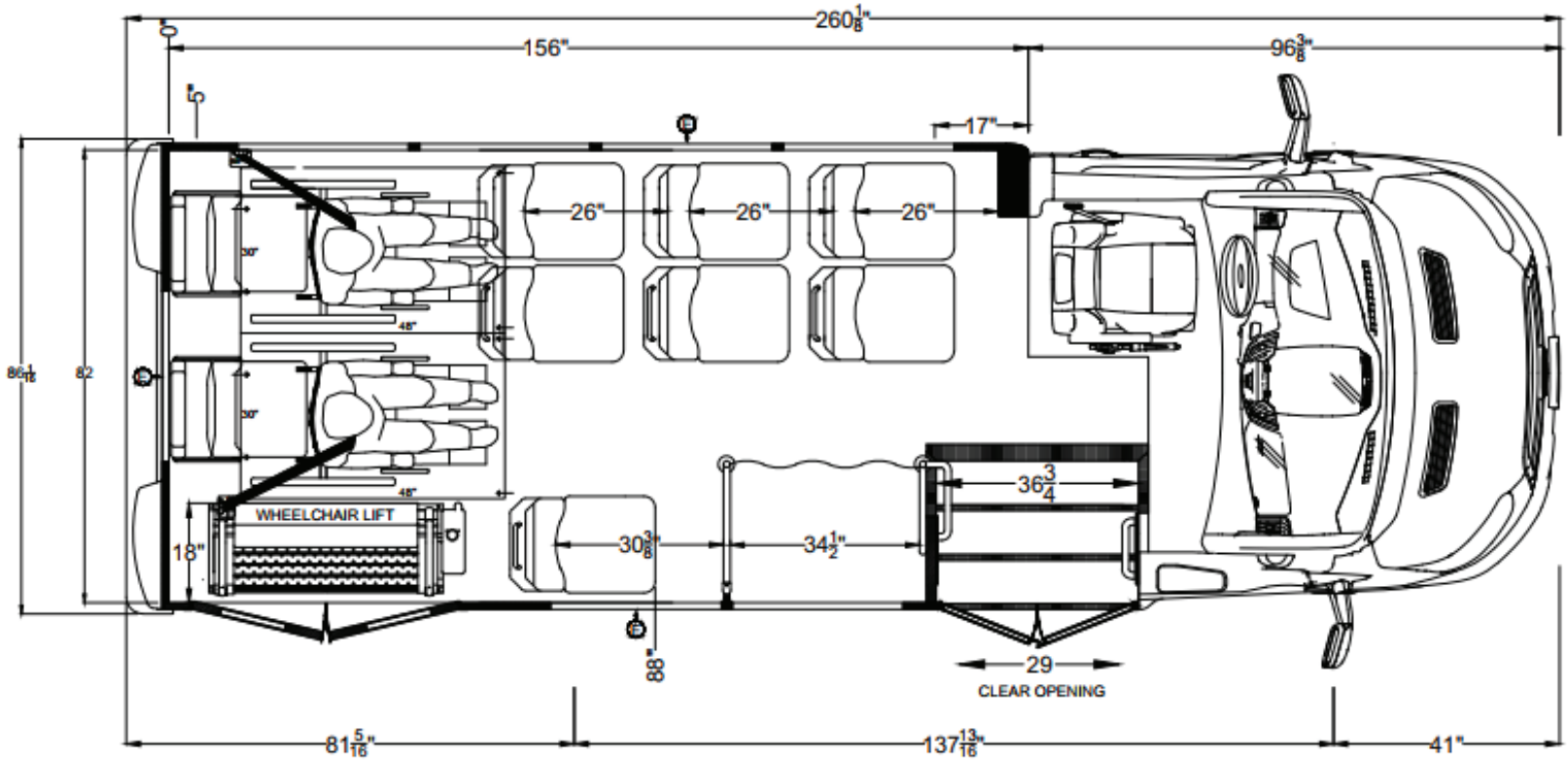

ABC COMPANIES

TURTLETOP

Terra Transit

LD – 8 Passenger with Wheelchair Access

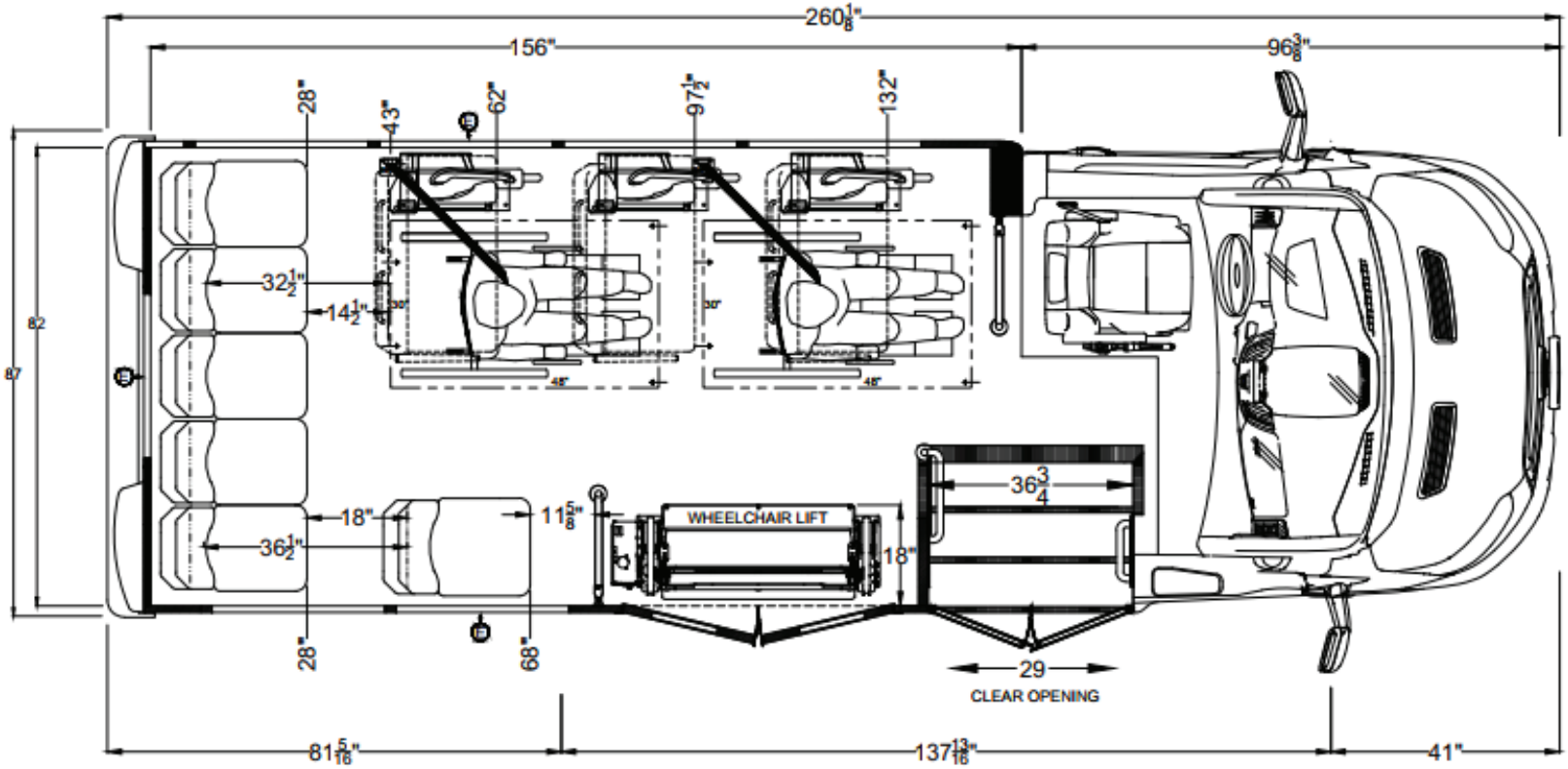

ABC COMPANIES

TURTLETOP

Terra Transit

LD – 10 Passenger with Wheelchair Access

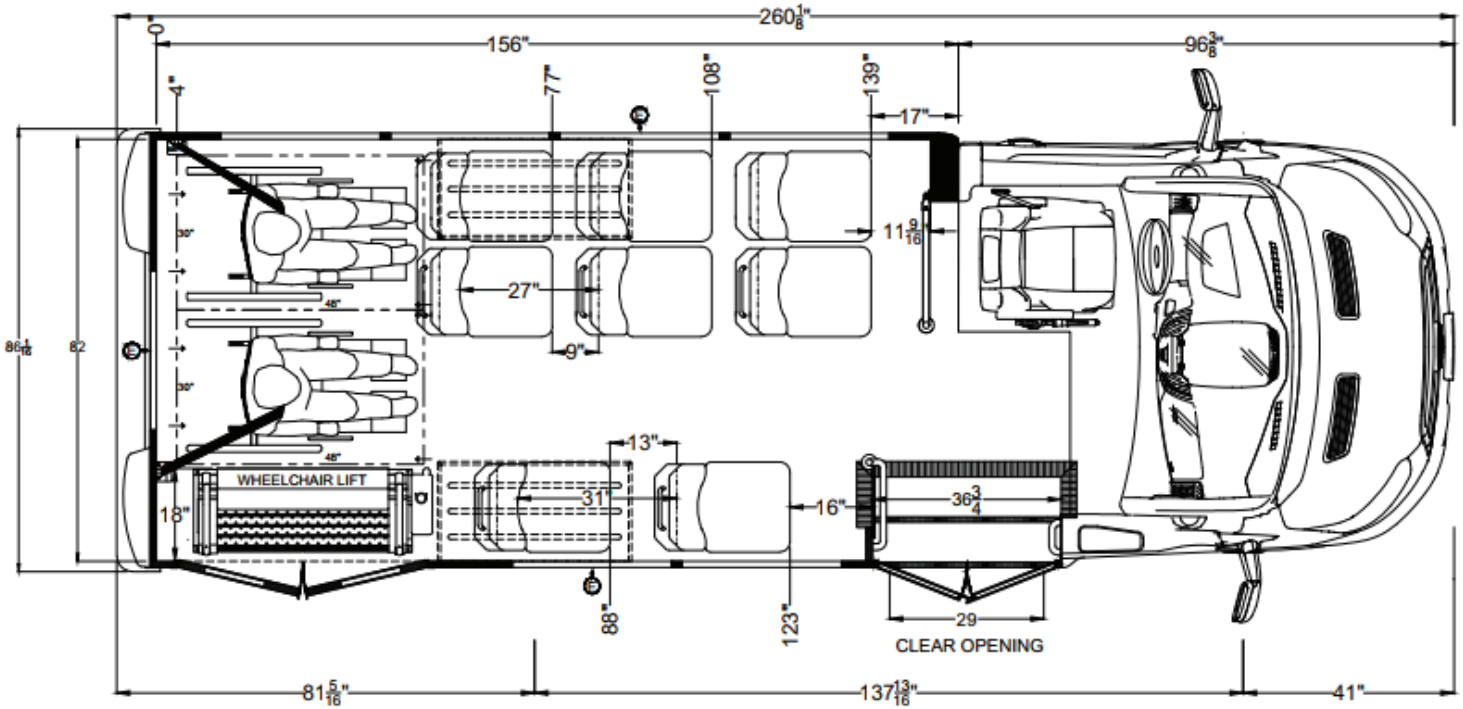

ABC COMPANIES

TURTLETOP

Terra Transit

LD – 14 Passenger Aisle Facing

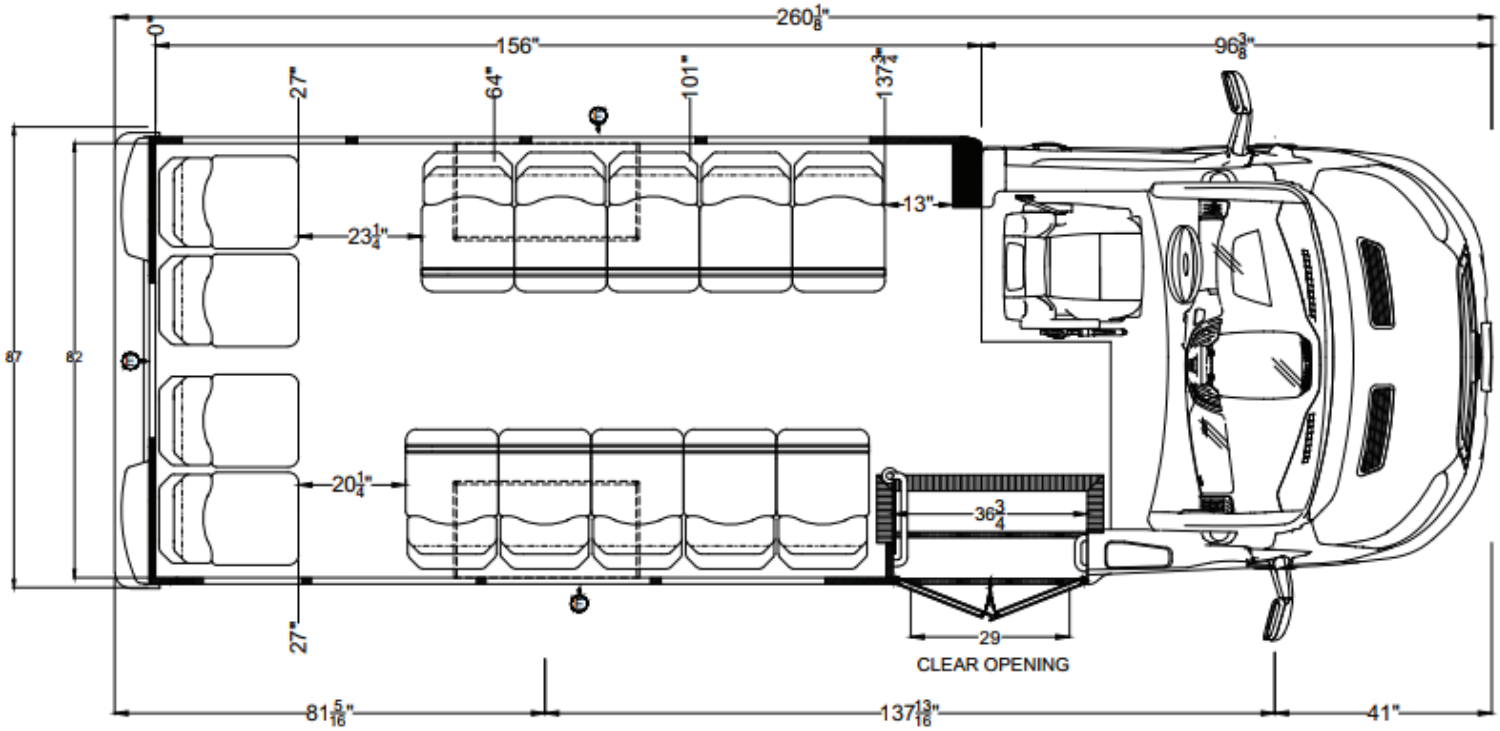

ABC COMPANIES

TURTLETOP

Terra Transit

LD – 14 Passenger

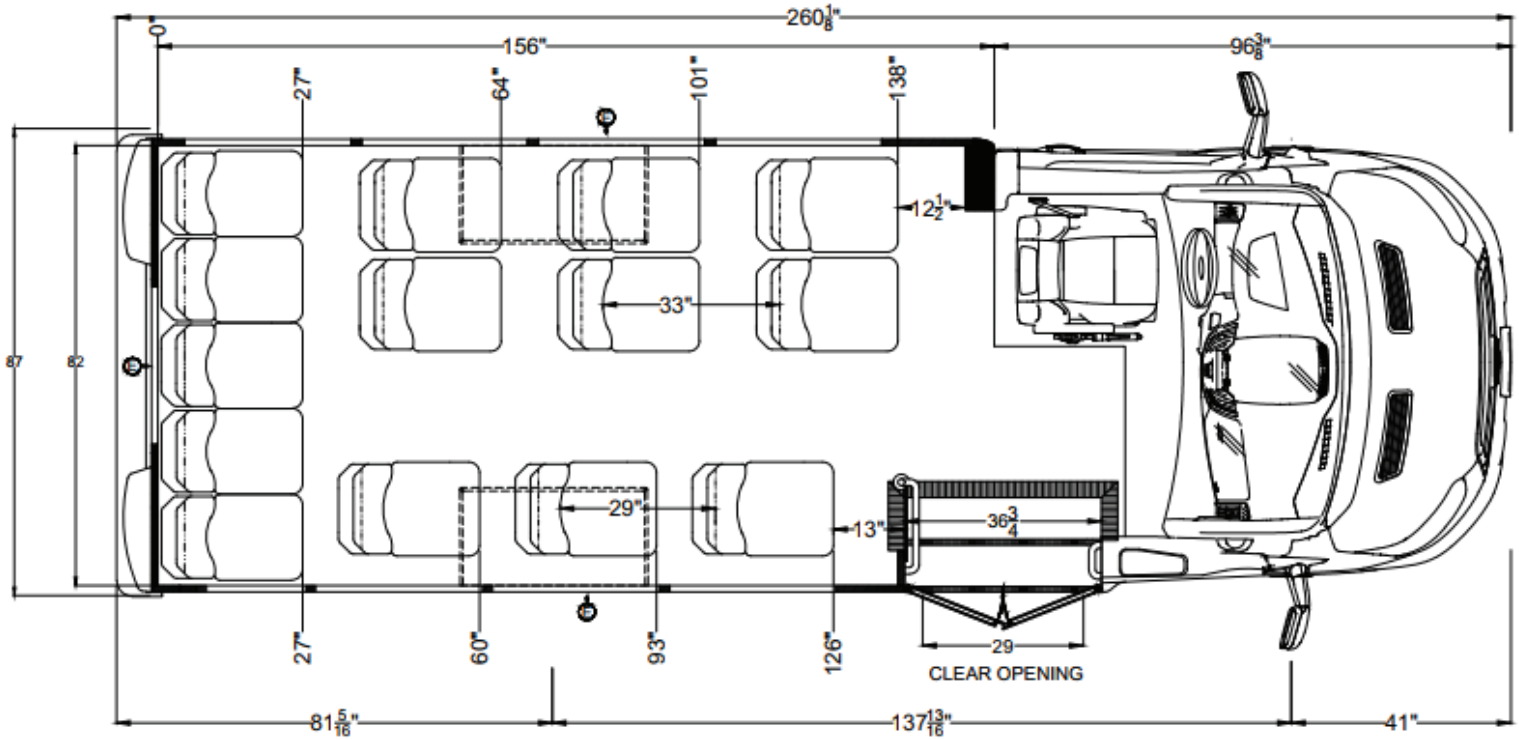

TURTLETOP

Terra Transit

MD – 24 Passenger with Rear Luggage

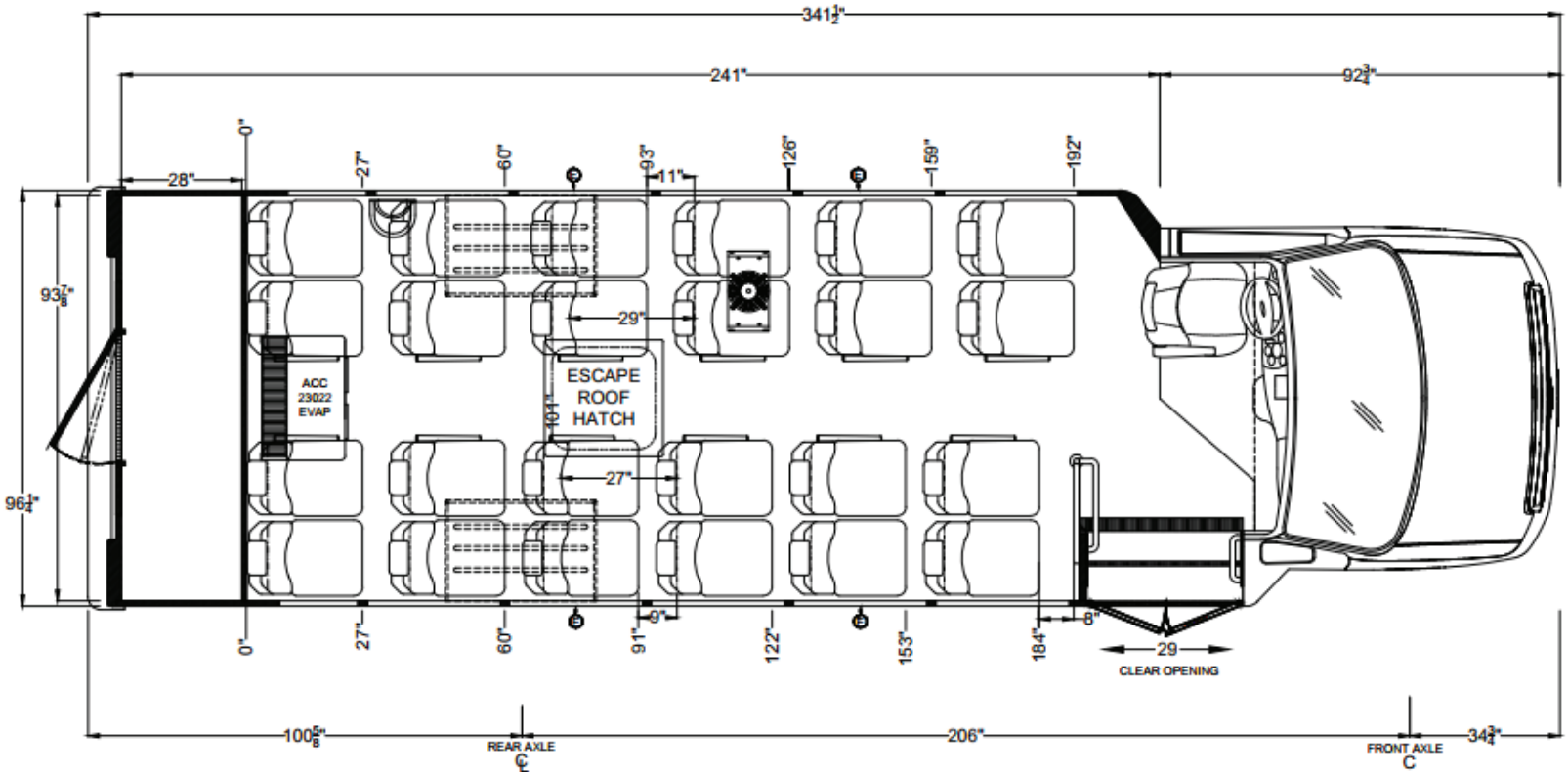

ABC COMPANIES

TURTLETOP

Terra Transit

MD – 23 Passenger with Rear Luggage

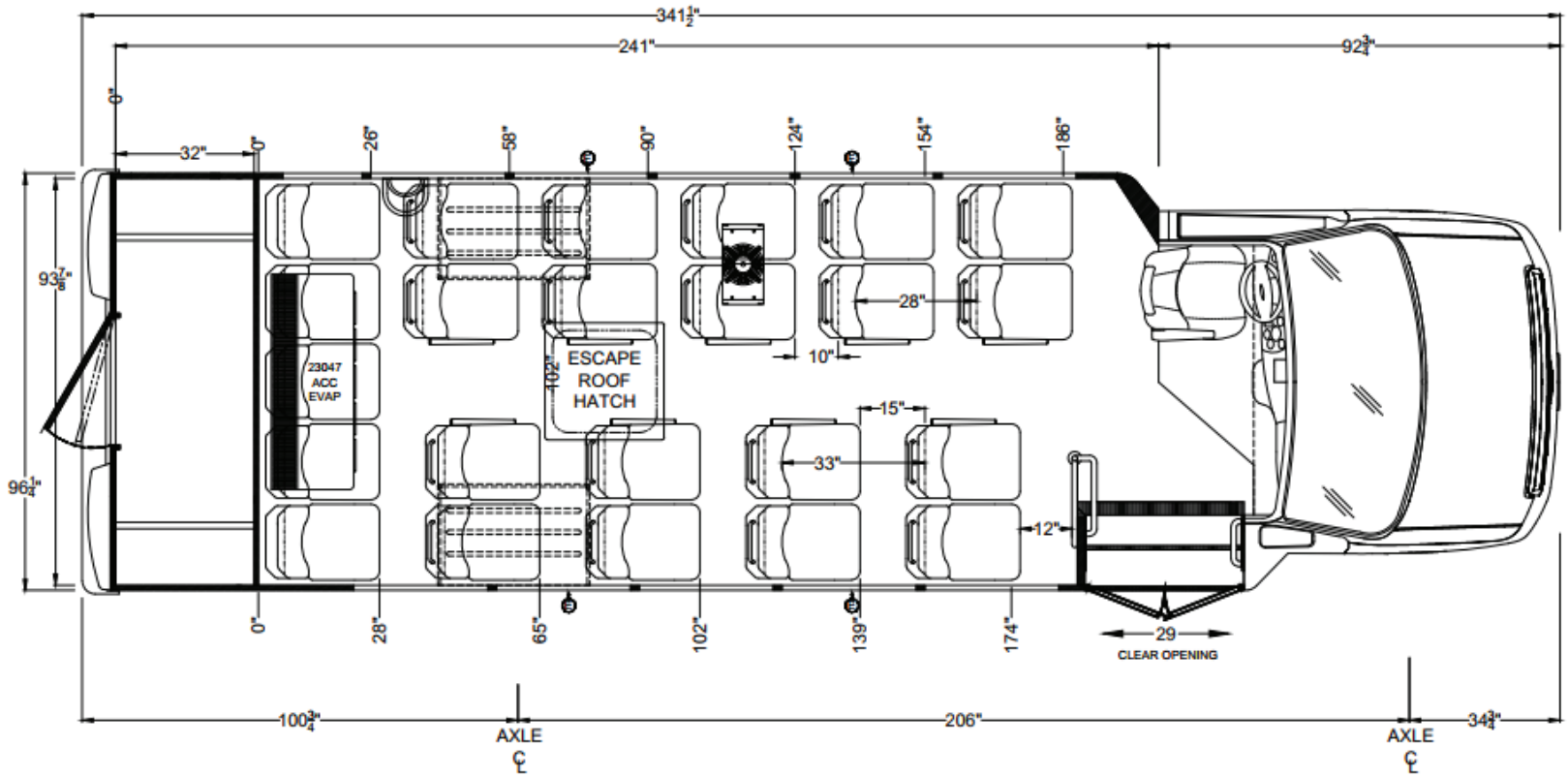

ABC COMPANIES

TURTLETOP

Terra Transit

MD – 22 Passenger with Wheelchair Access

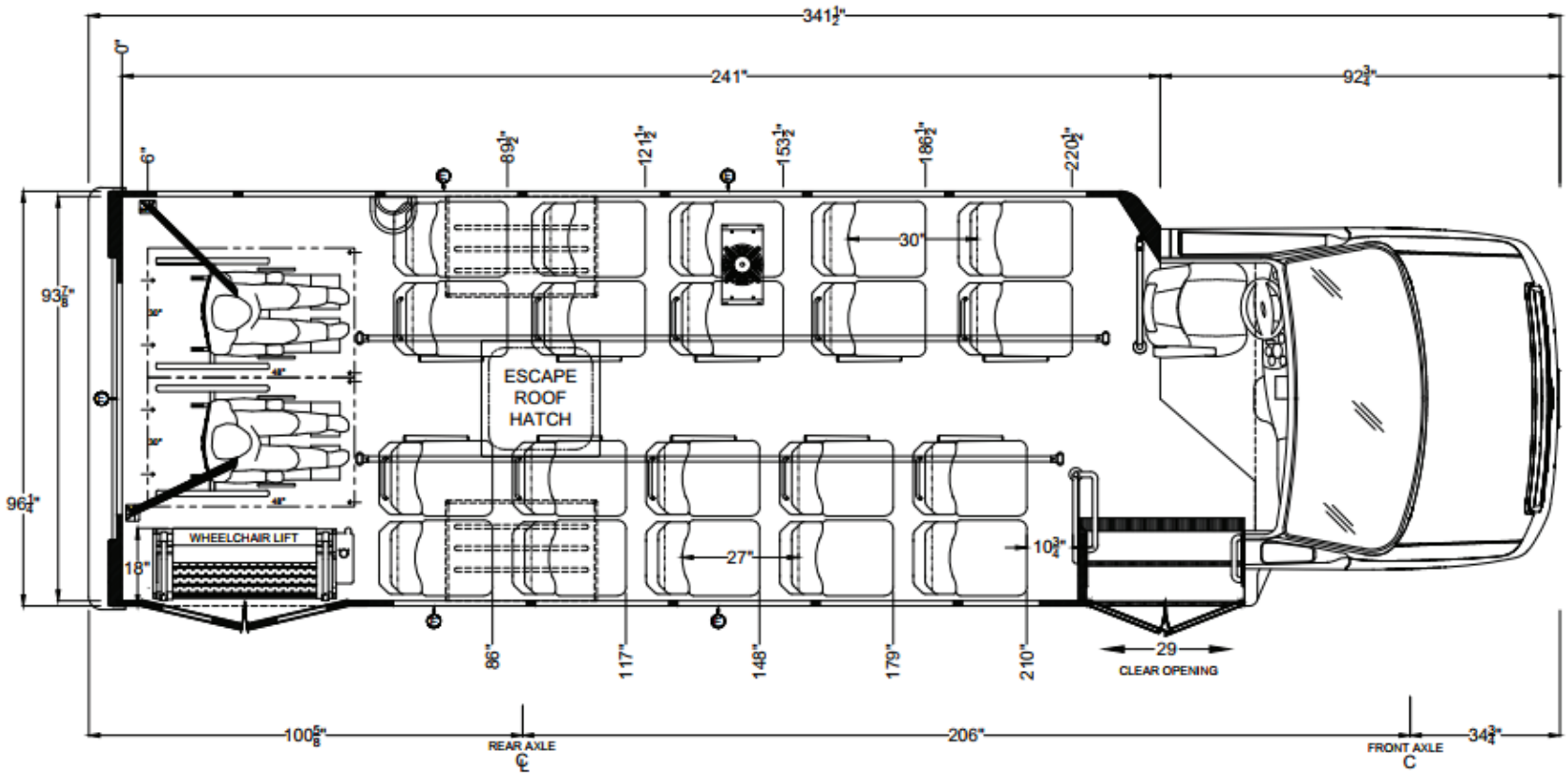

ABC COMPANIES

TURTLETOP

Terra Transit

MD – 18 Passenger with Wheelchair Access and Luggage/Cargo

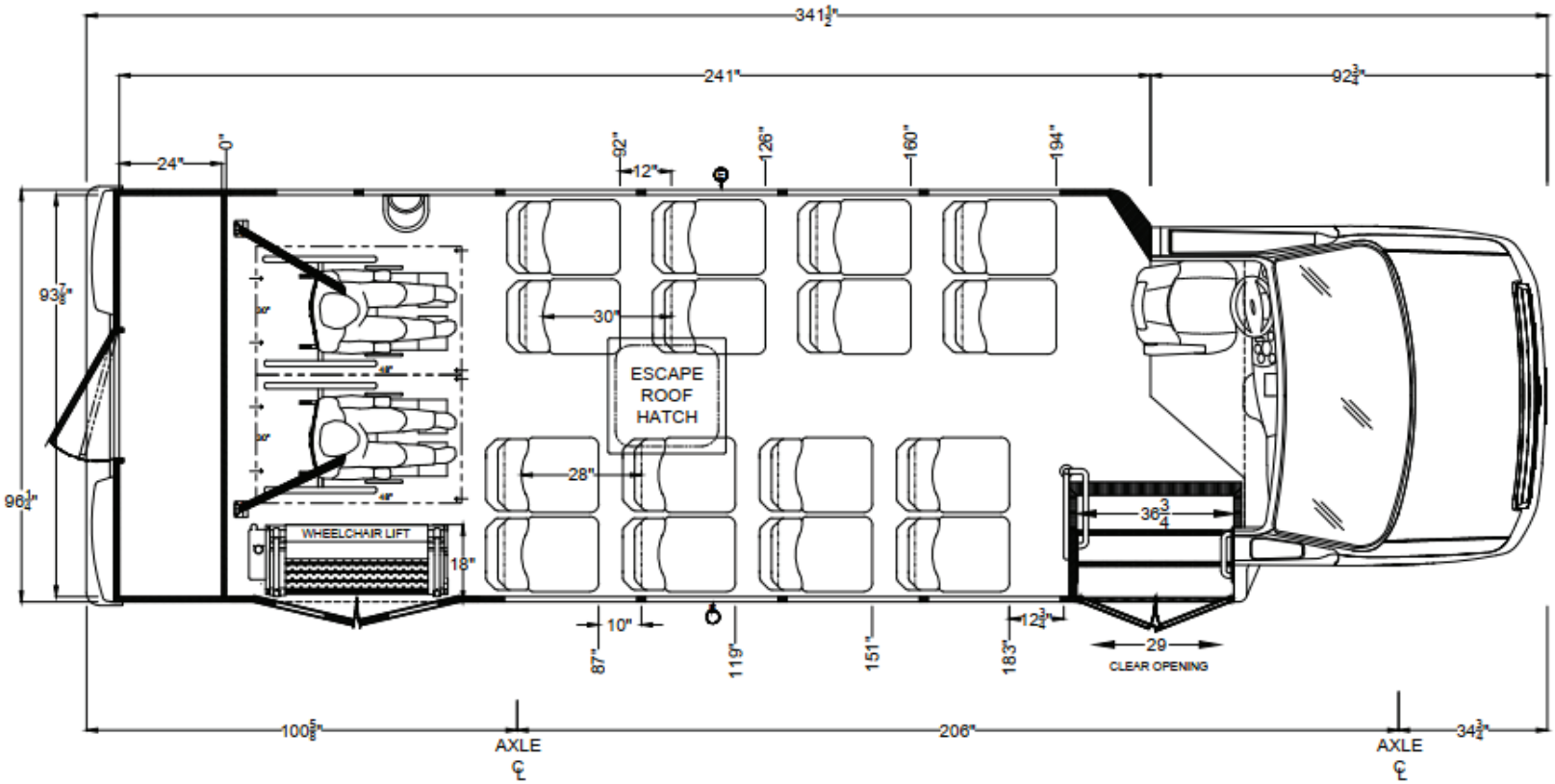

ABC COMPANIES

TURTLETOP

Terra Transit

MD – 24 Passenger

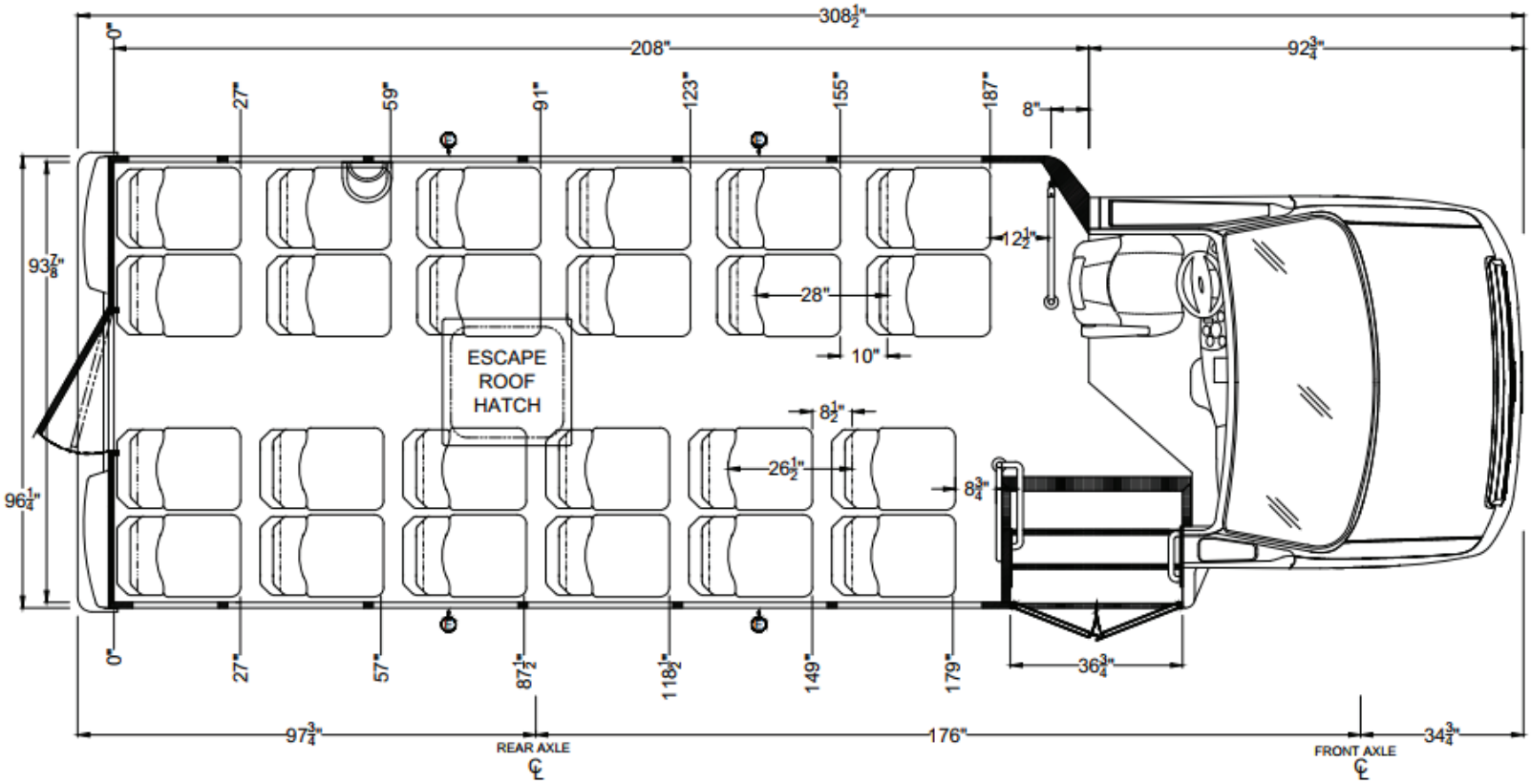

TURTLETOP

Terra Transit

MD – 16 Passenger with Wheelchair Access

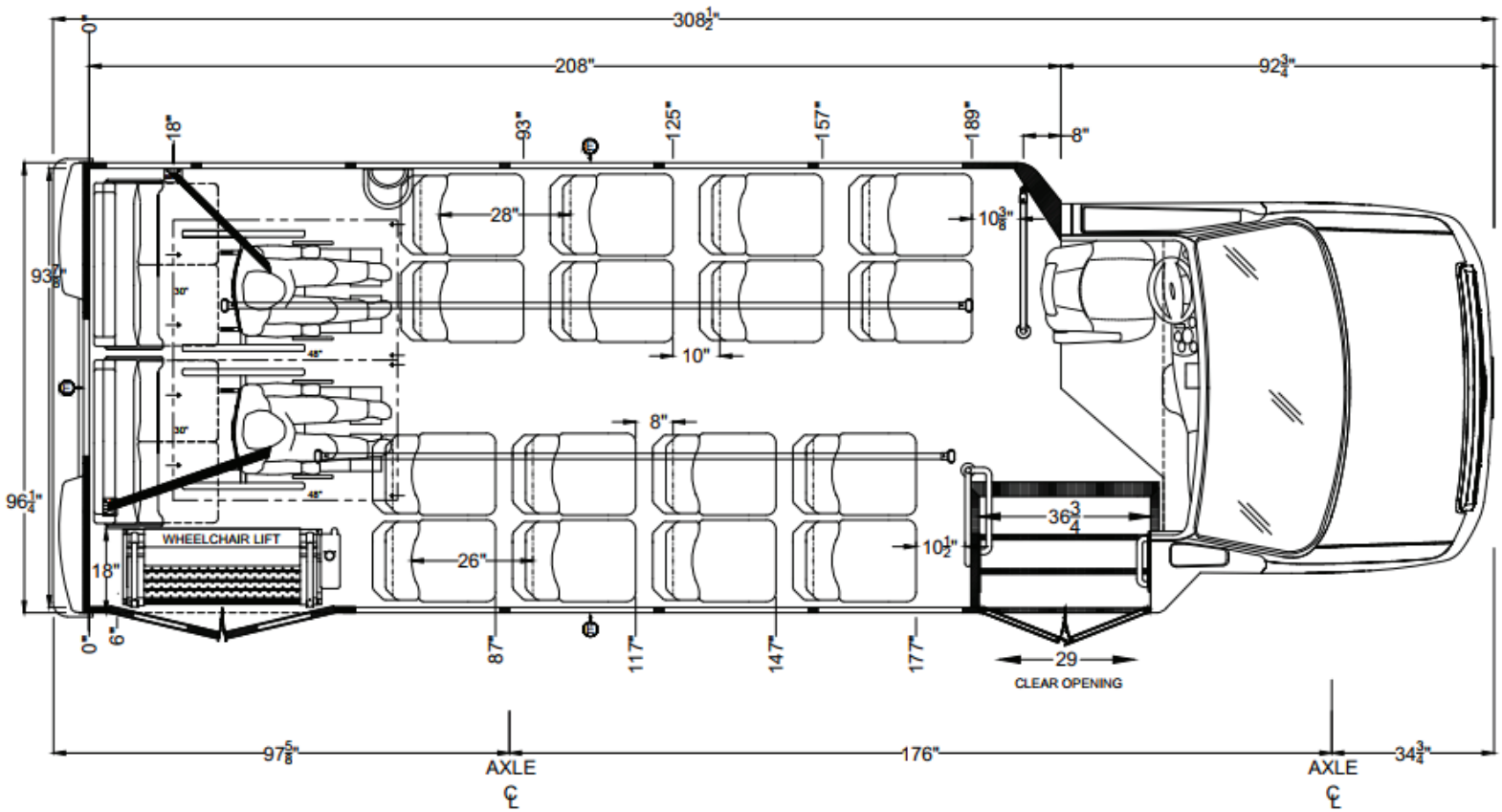

ABC COMPANIES

TURTLETOP

Terra Transit

MD – 14 Passenger with Rear Luggage and Wheelchair Access

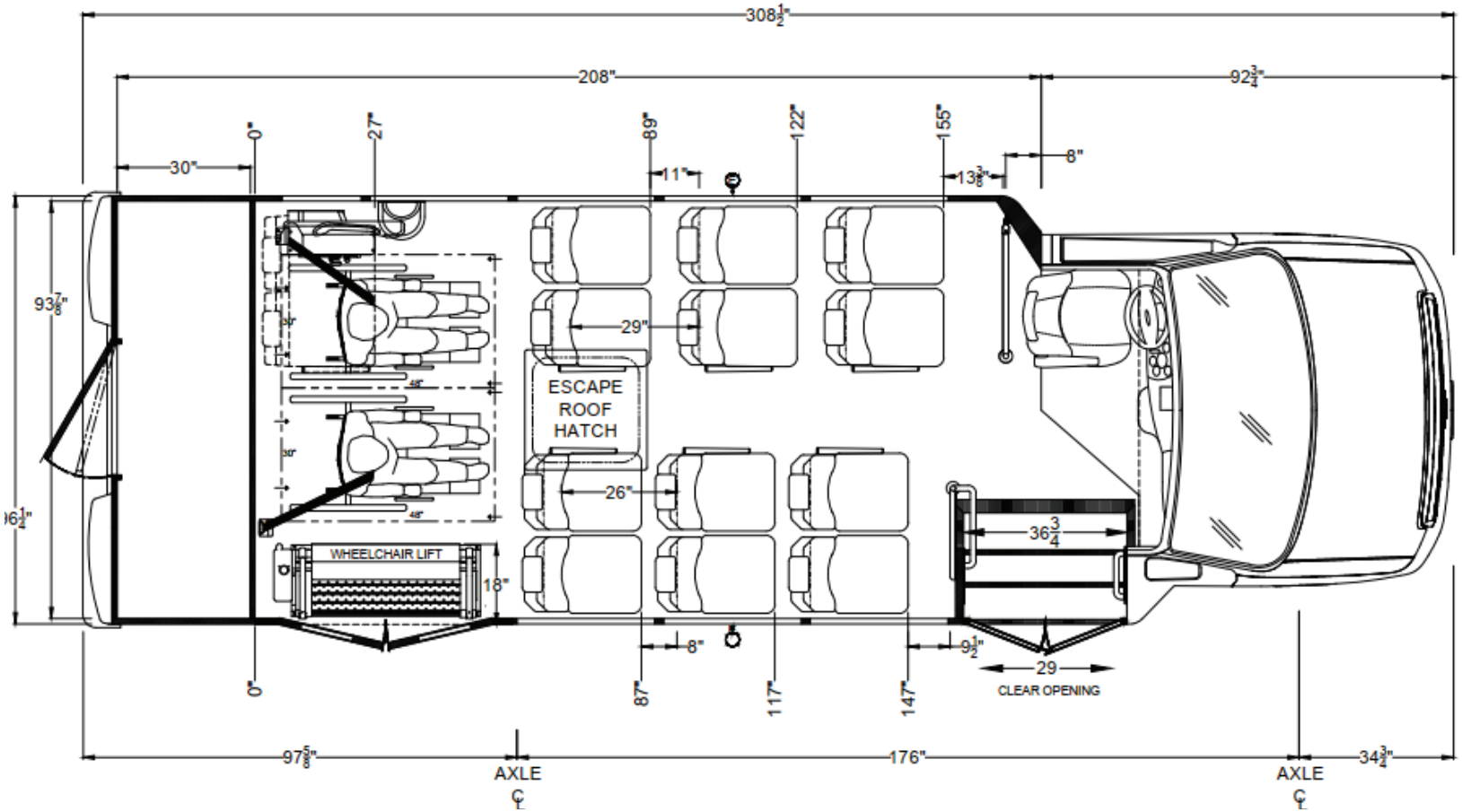

ABC COMPANIES

TURTLETOP

Terra Transit

MD – 12 Passenger with Wheelchair Access

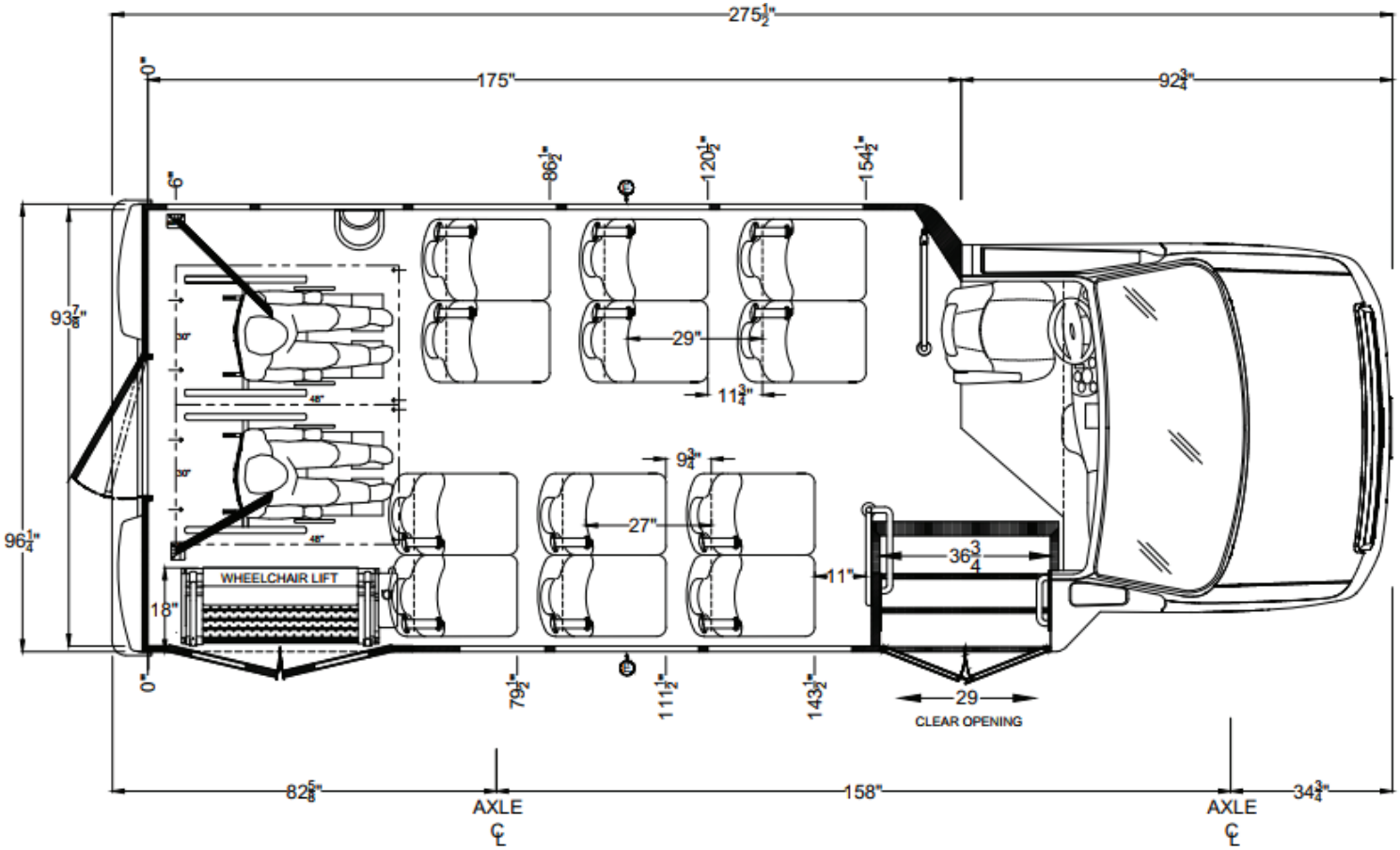

ABC COMPANIES

TURTLETOP

Terra Transit

MD – 5 Passenger with Wheelchair Access

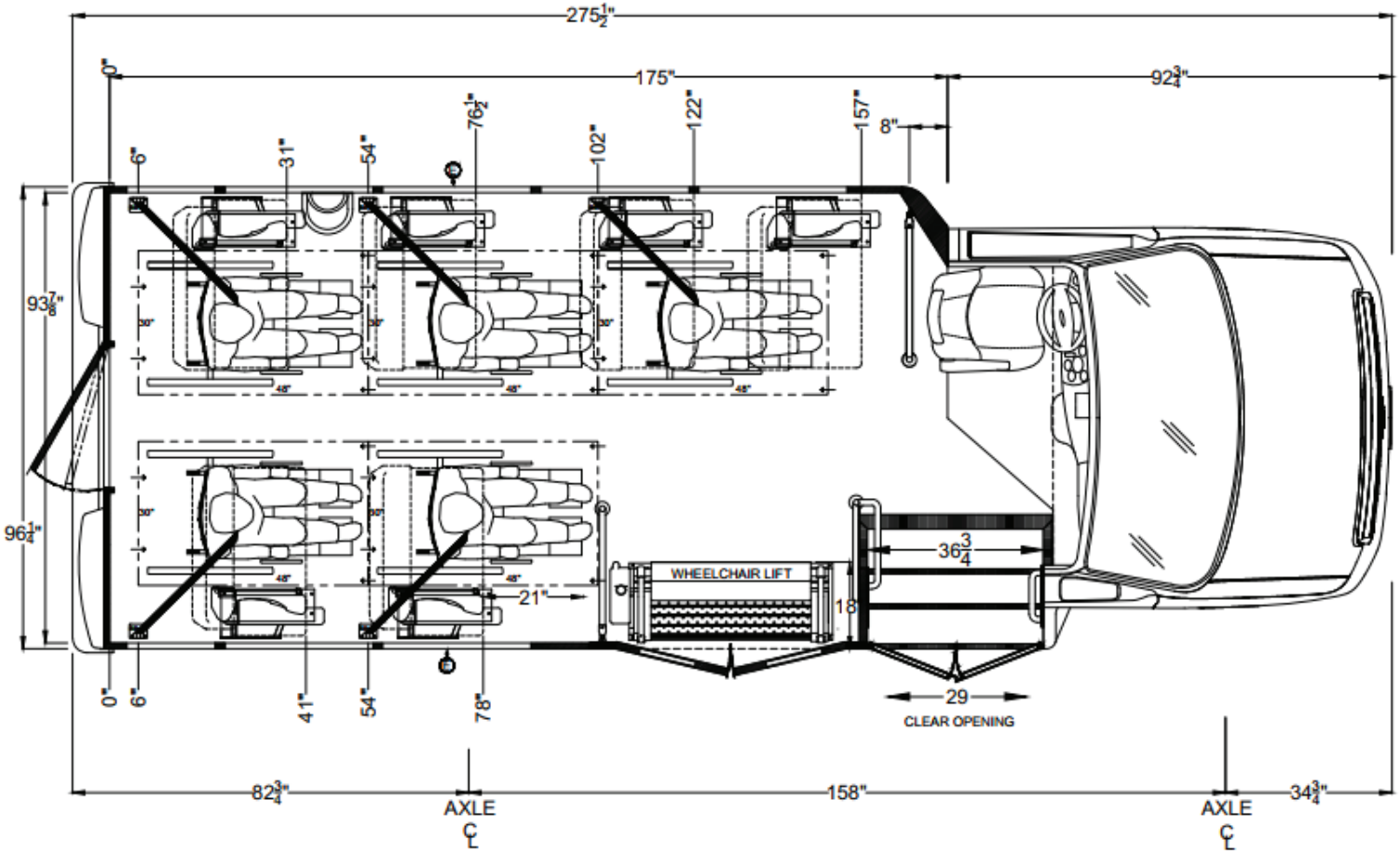

TURTLETOP

Terra Transit

MD – 13 Passenger with Wheelchair Access

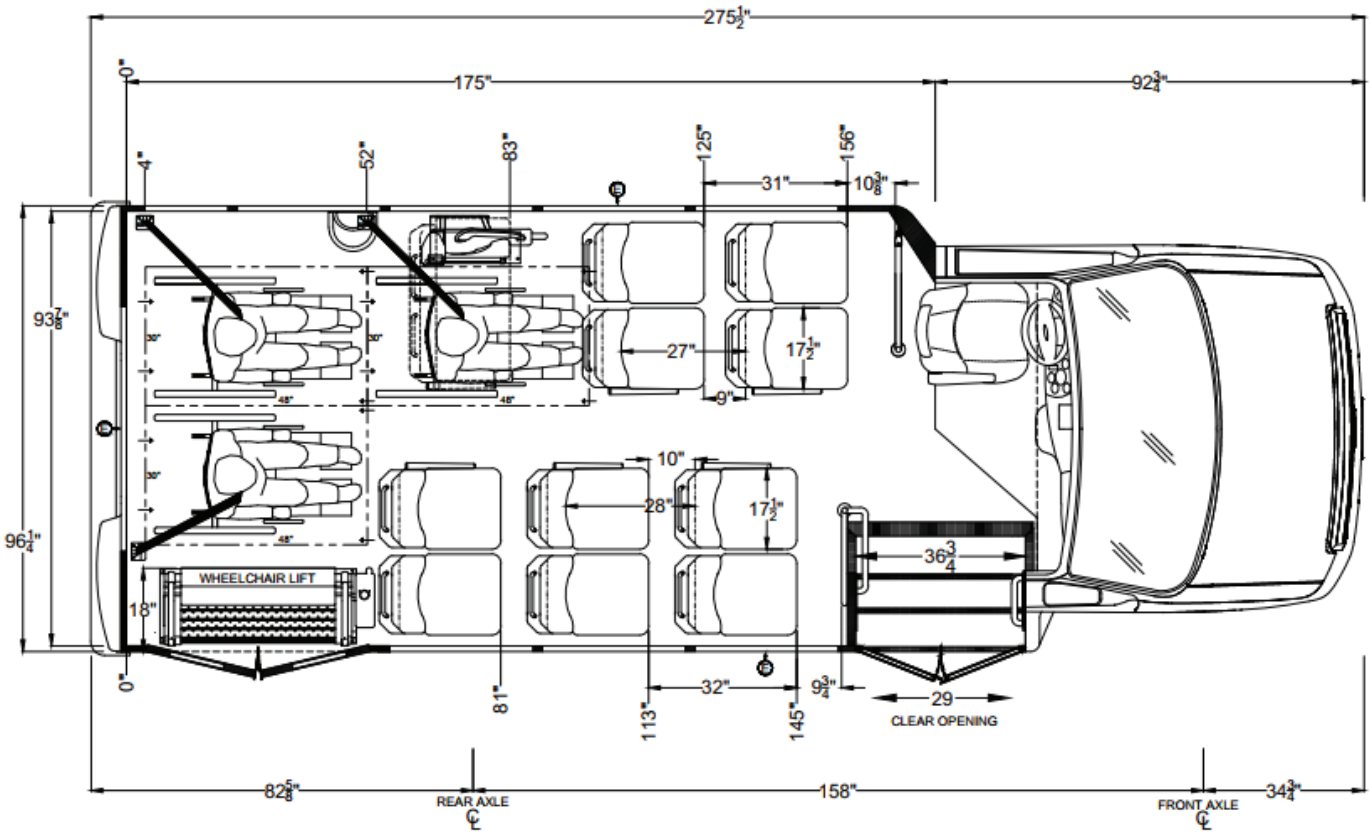

ABC COMPANIES

TURTLETOP

Terra Transit

MD – 10 Passenger with Wheelchair Access

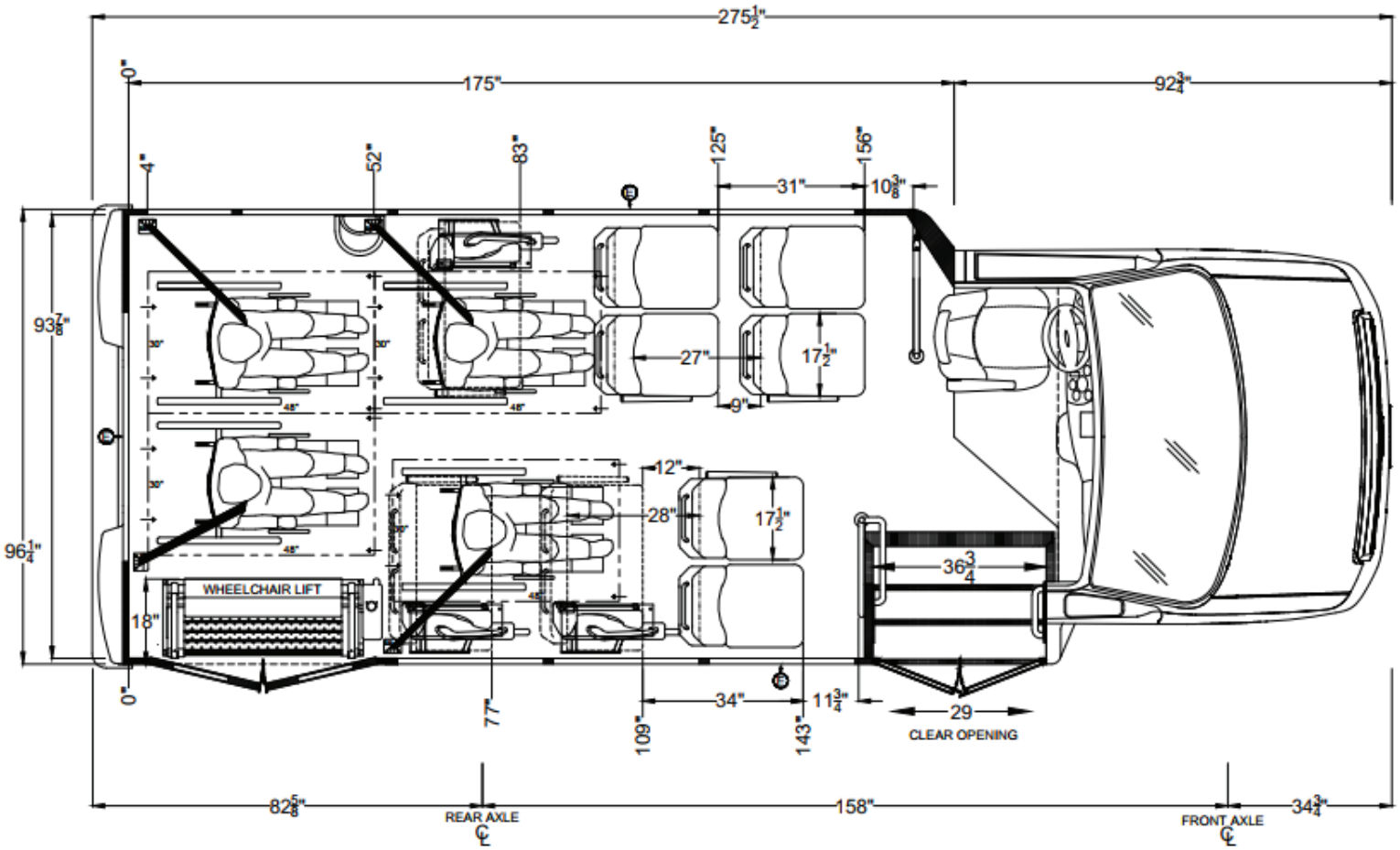

ABC COMPANIES

TURTLETOP

Terra Transit

MD – 9 Passenger with Wheelchair Access

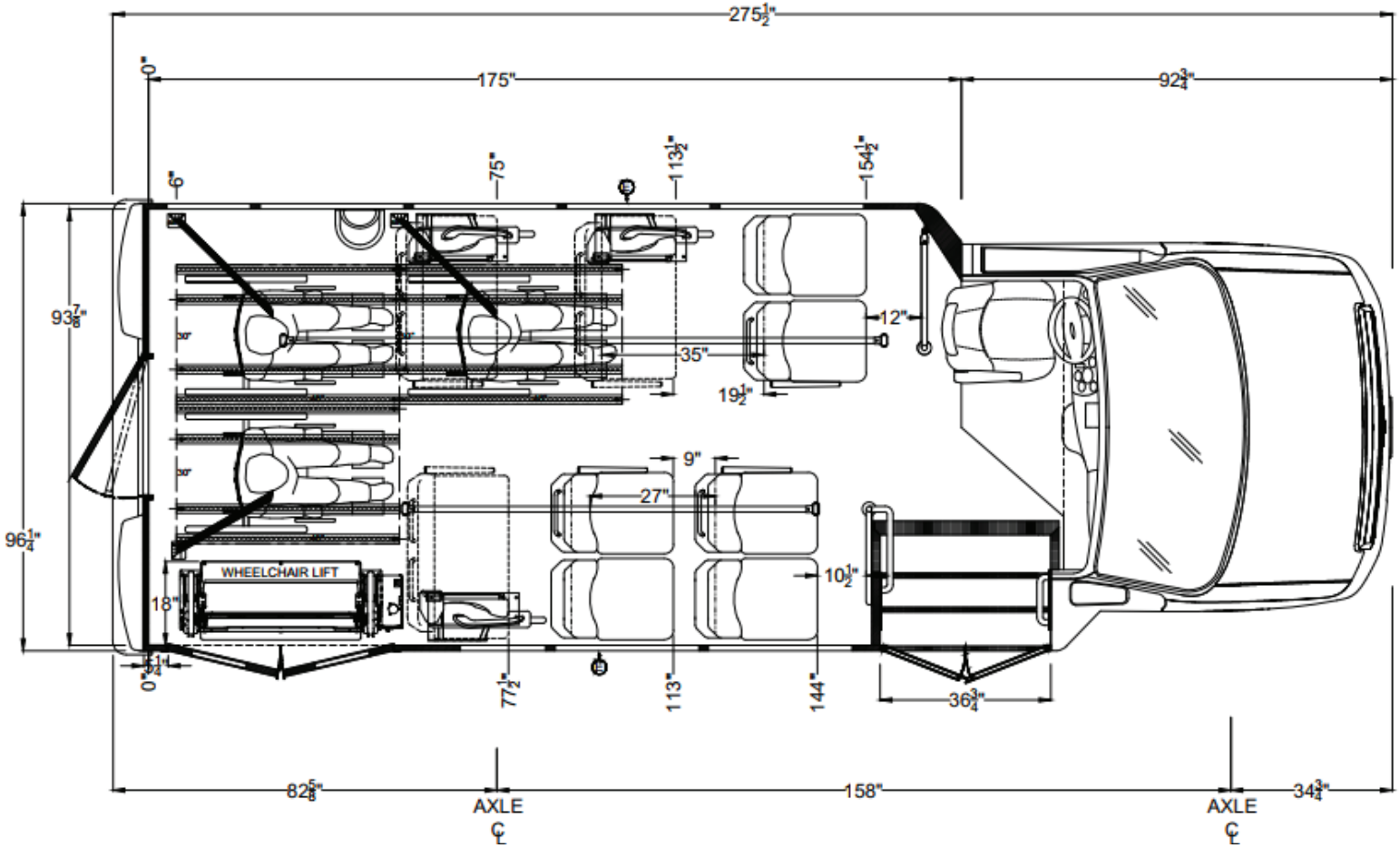

ABC COMPANIES

TURTLETOP

Terra Transit

MD – 14 Passenger

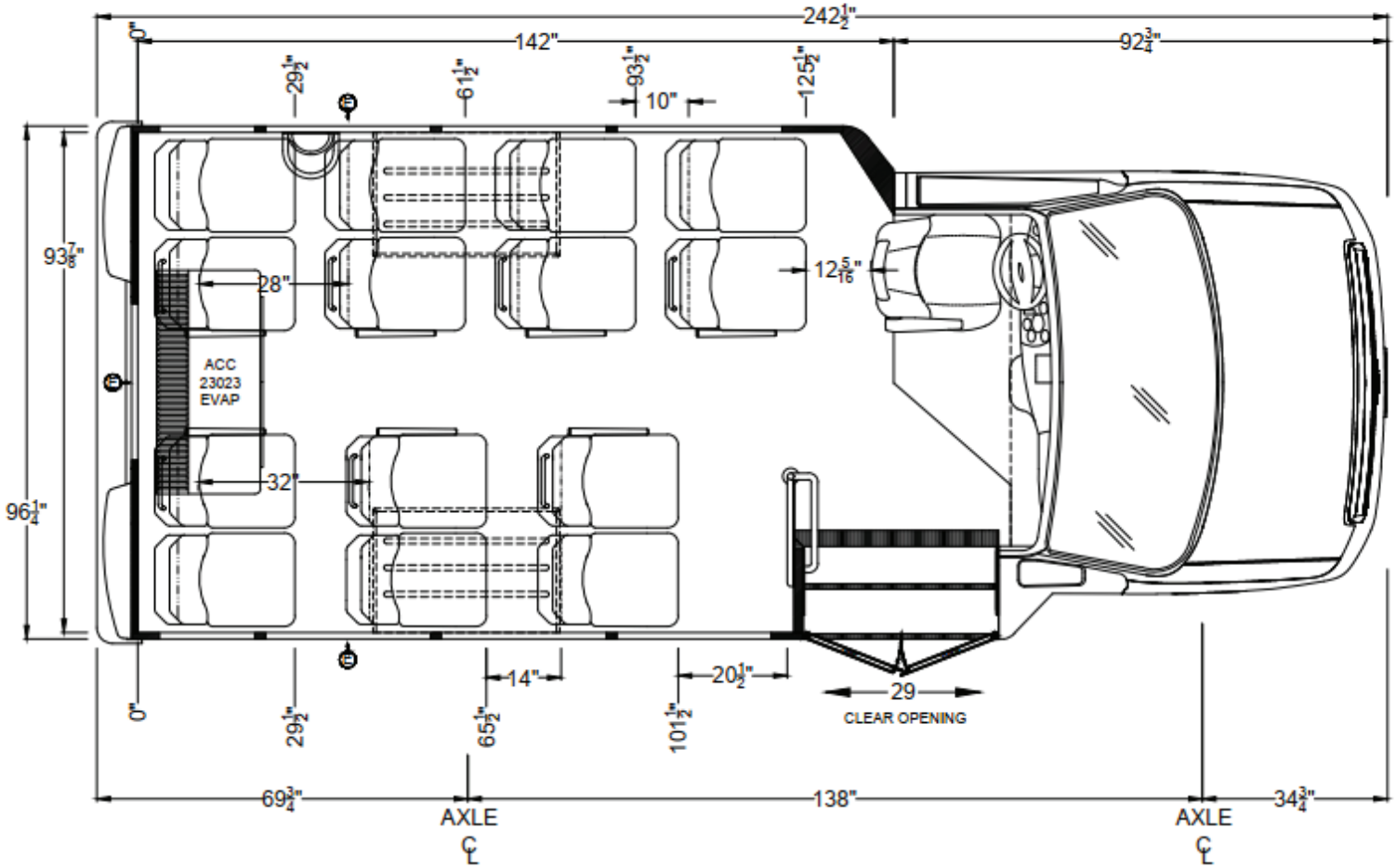

ABC COMPANIES

TURTLETOP

Terra Transit

HD – 24 Passenger with Wheelchair Access

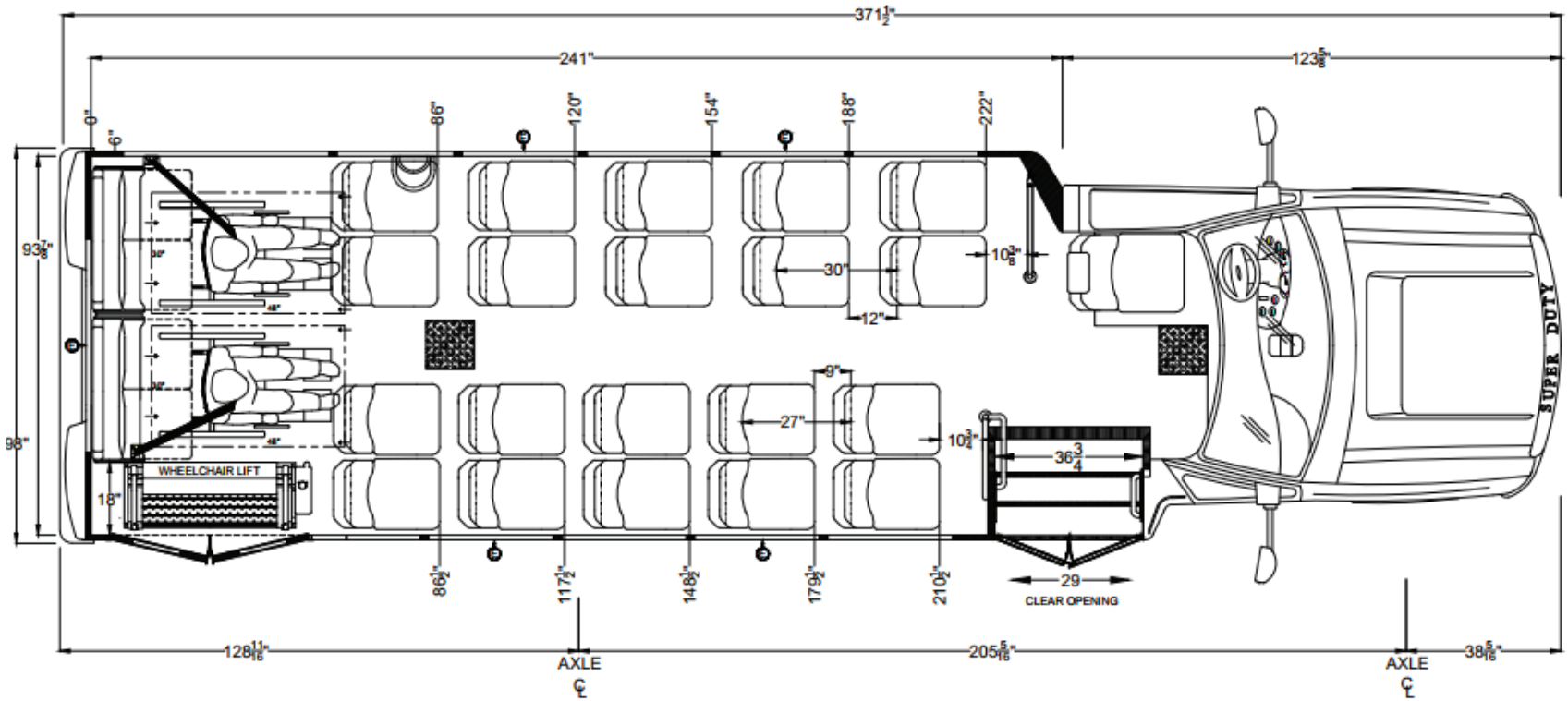

ABC COMPANIES

TURTLETOP

Terra Transit

HD – 29 Passenger

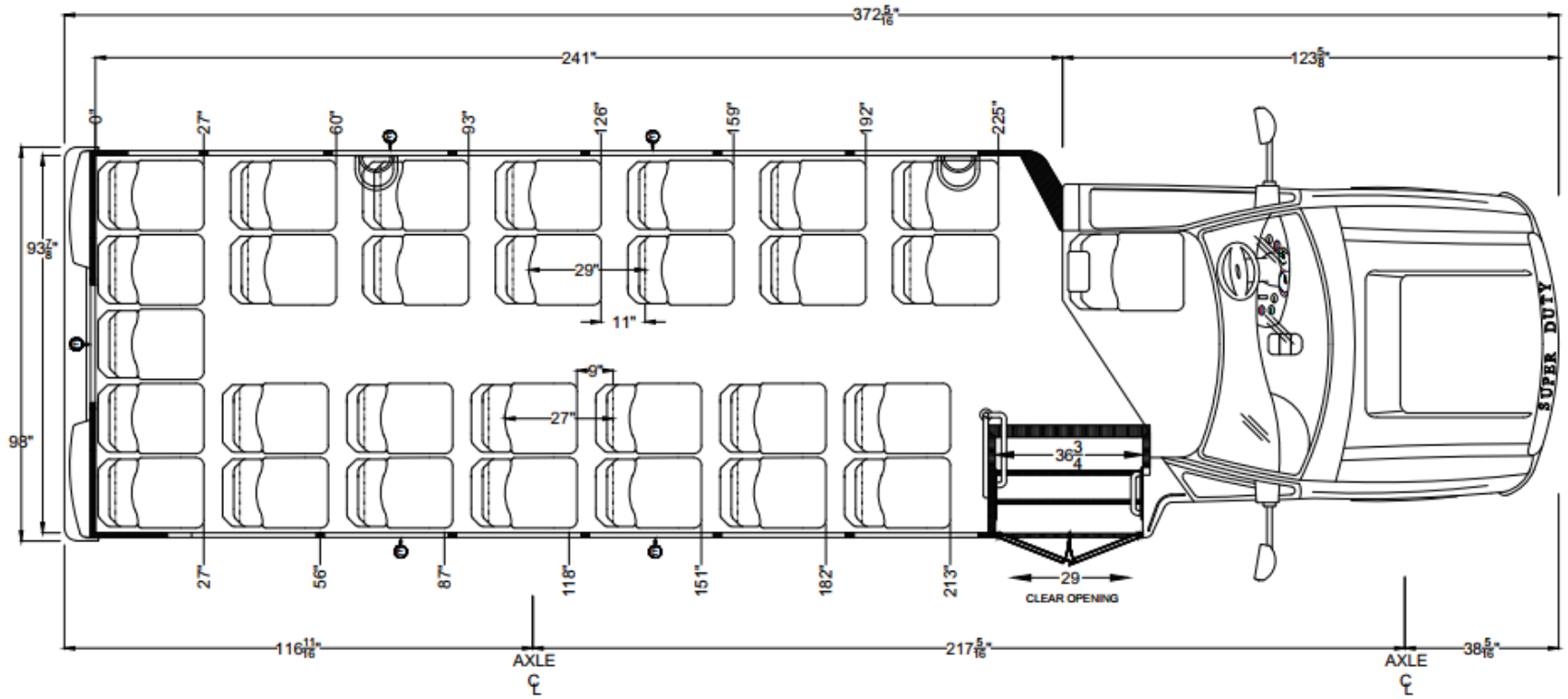

ABC COMPANIES

TURTLETOP

Terra Transit

HD – 22 Passenger with Wheelchair Access

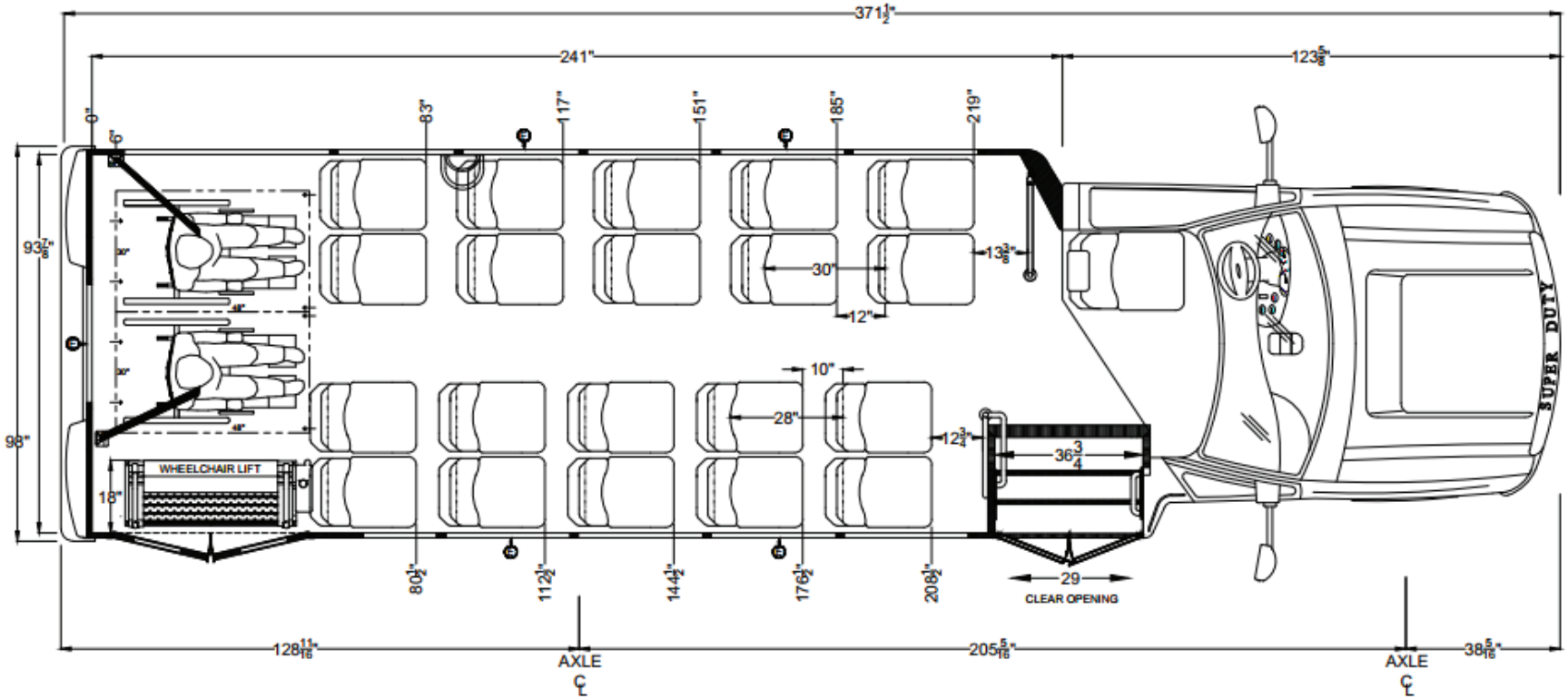

ABC COMPANIES

TURTLETOP

Terra Transit

HD – 33 Passenger

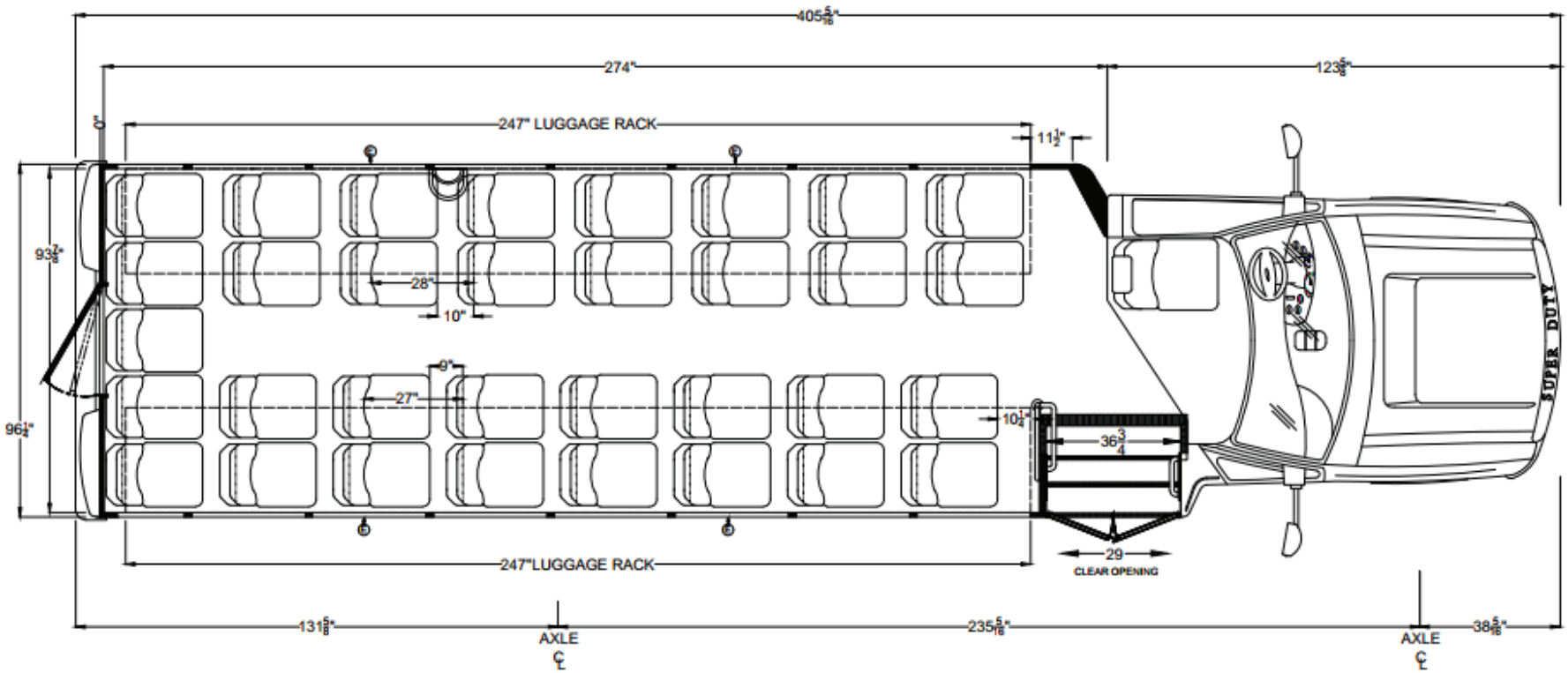

ABC COMPANIES

TURTLETOP

Terra Transit

HD – 32 Passenger with Wheelchair Access

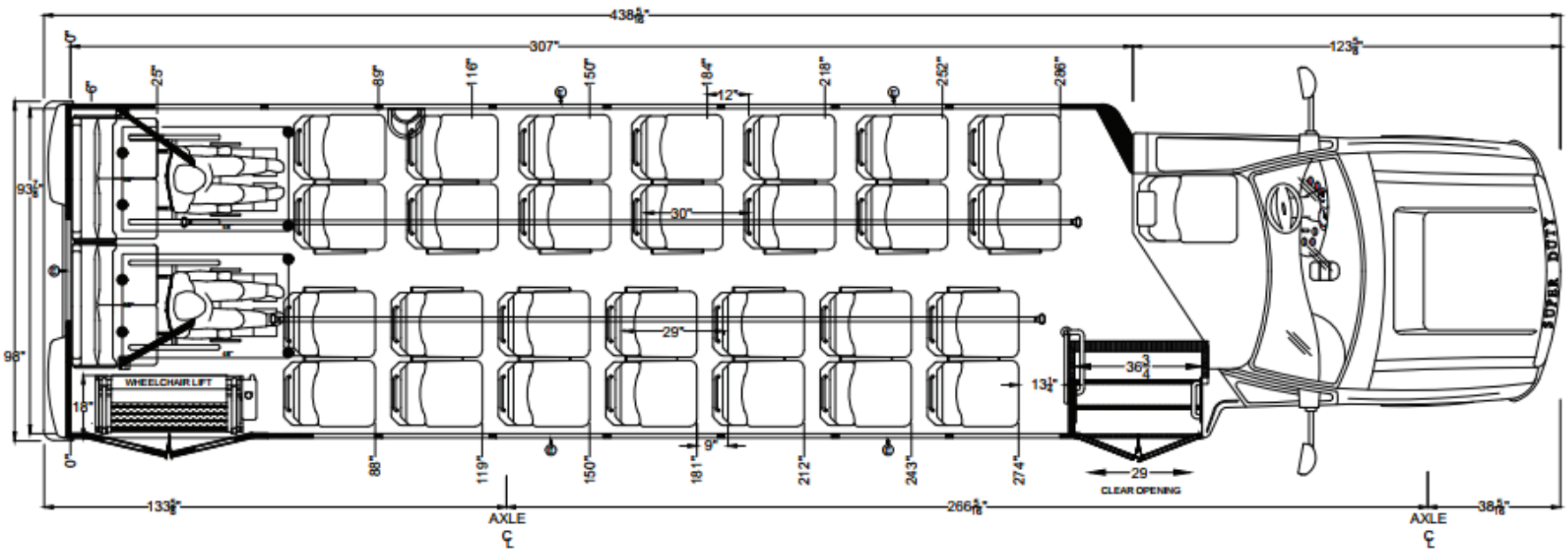

TURTLETOP

Terra Transit

29 Passenger with Luggage/Cargo

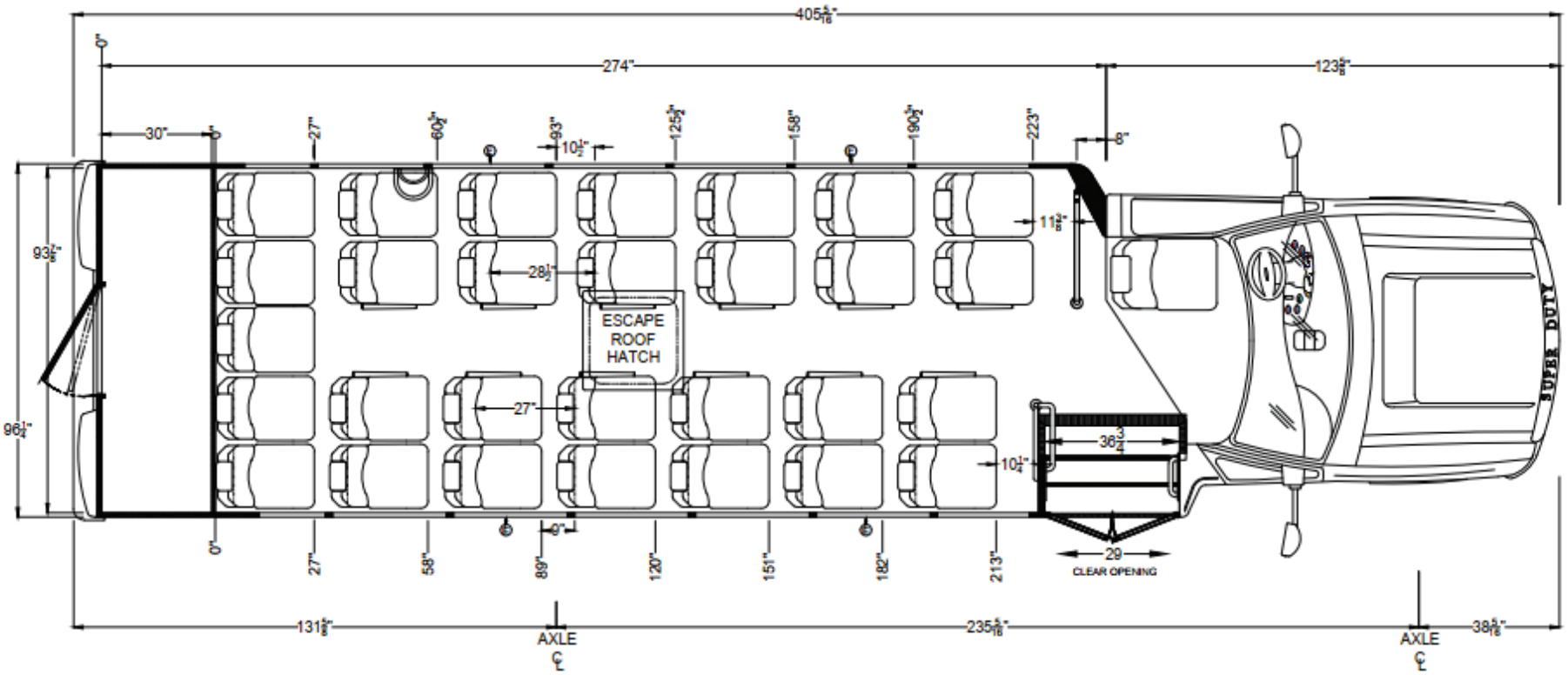

TURTLETOP

Terra Transit

HD – 28 Passenger with Wheelchair Access

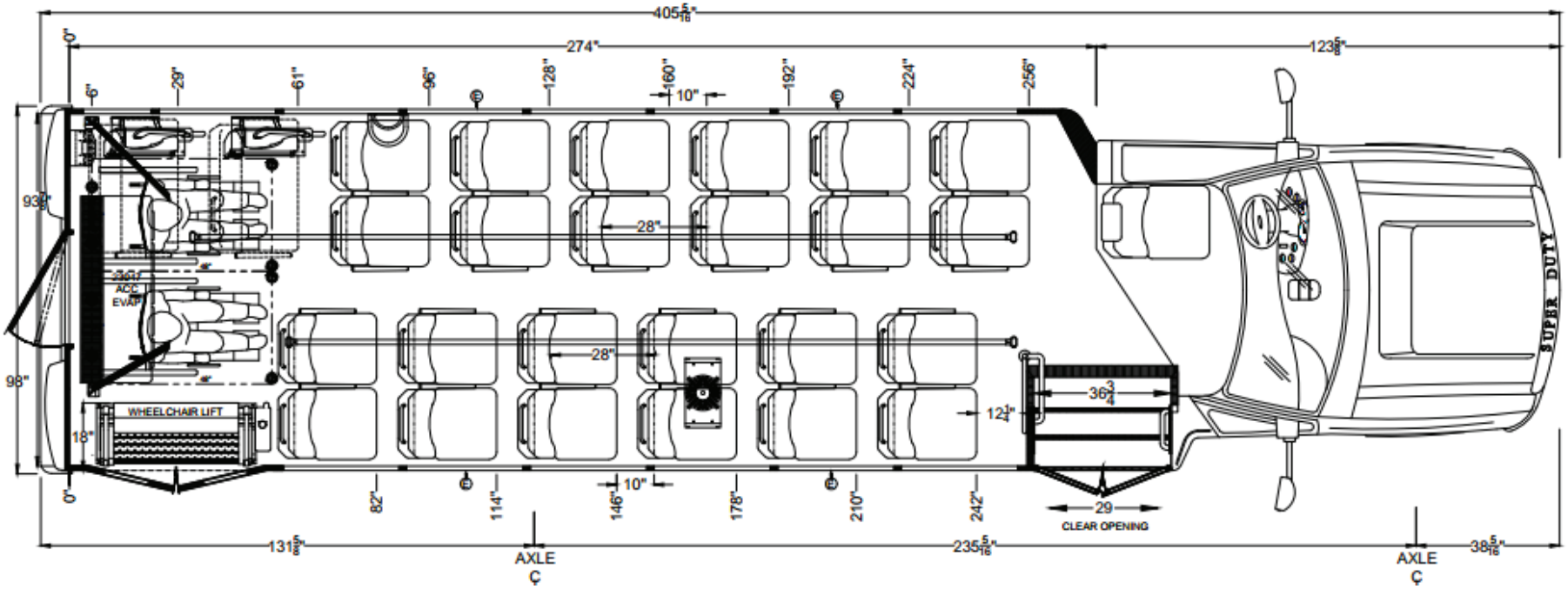

ABC COMPANIES

TURTLETOP

Terra Transit

HD – 36 Passenger

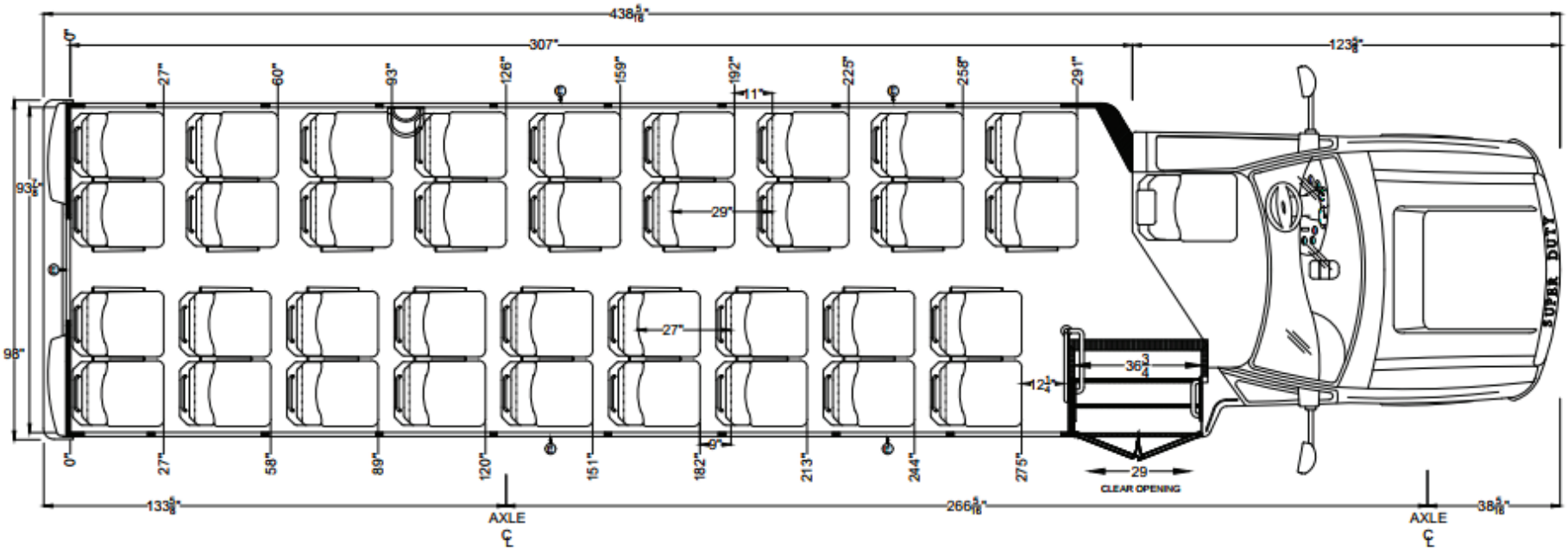

TURTLETOP

Terra Transit

HD – 33 Passenger with Luggage/Cargo

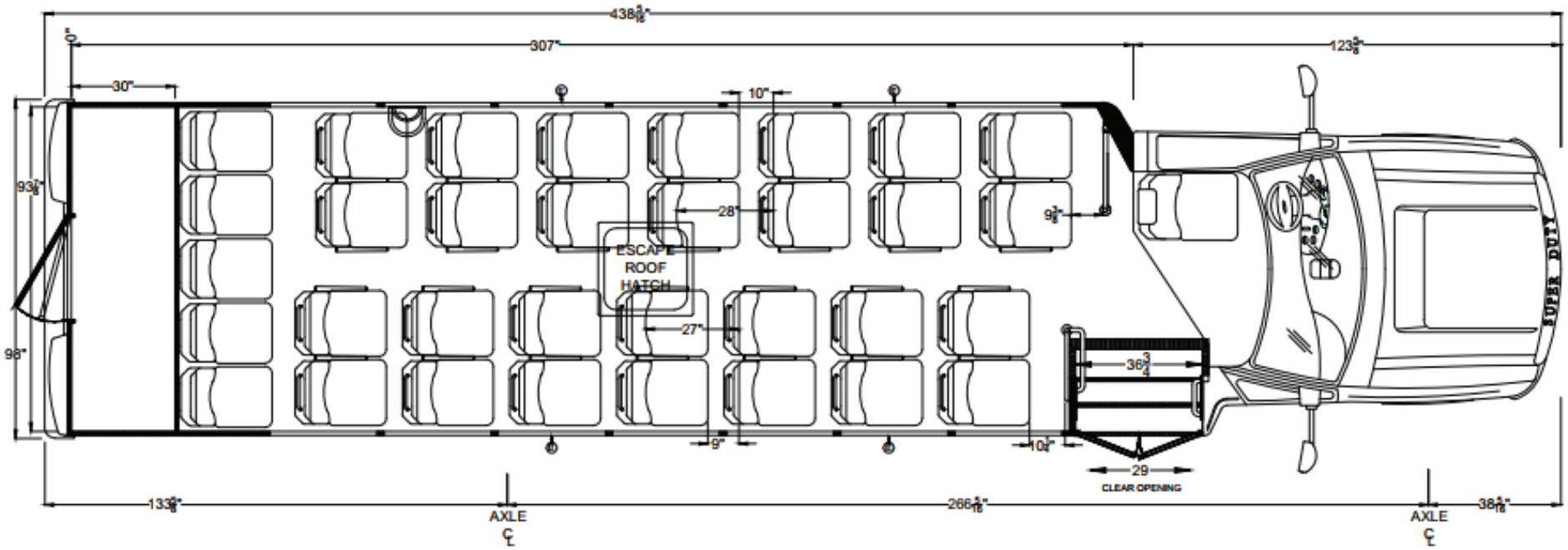

ABC COMPANIES